Parts List			
ITEM	QTY	PART NUMBER	DESCRIPTION
1	1	MEV10254A	1" FP Manifold Style Ve Body
2	1	VE10155SSH	1" VE SS Hollow Ball
3	1	MEV10151	1" Top Load Stem Assy
4	2	VE10264E	#139 O-RING, EPDM
5	4	V10117	5/16 - 18 X 3 1/2" HHCS
6	4	V10118	5/16" LOCKWASHER
7	4	V10119	5/16" HEX NUT
8	2	VE10258A	1" VE Seat TFM
9	2	VE10256A	1 1/4" VE ENDPLATE

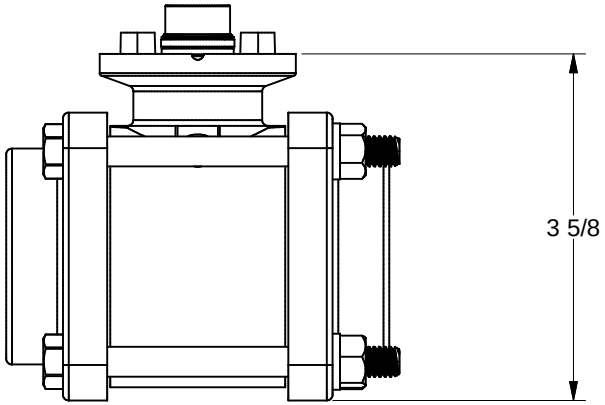

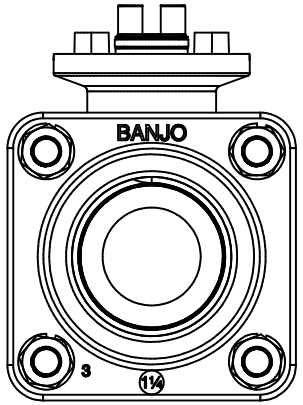

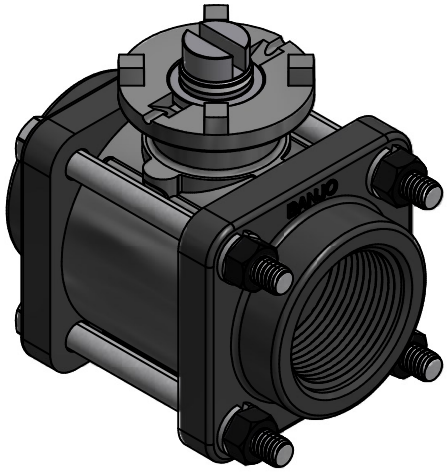

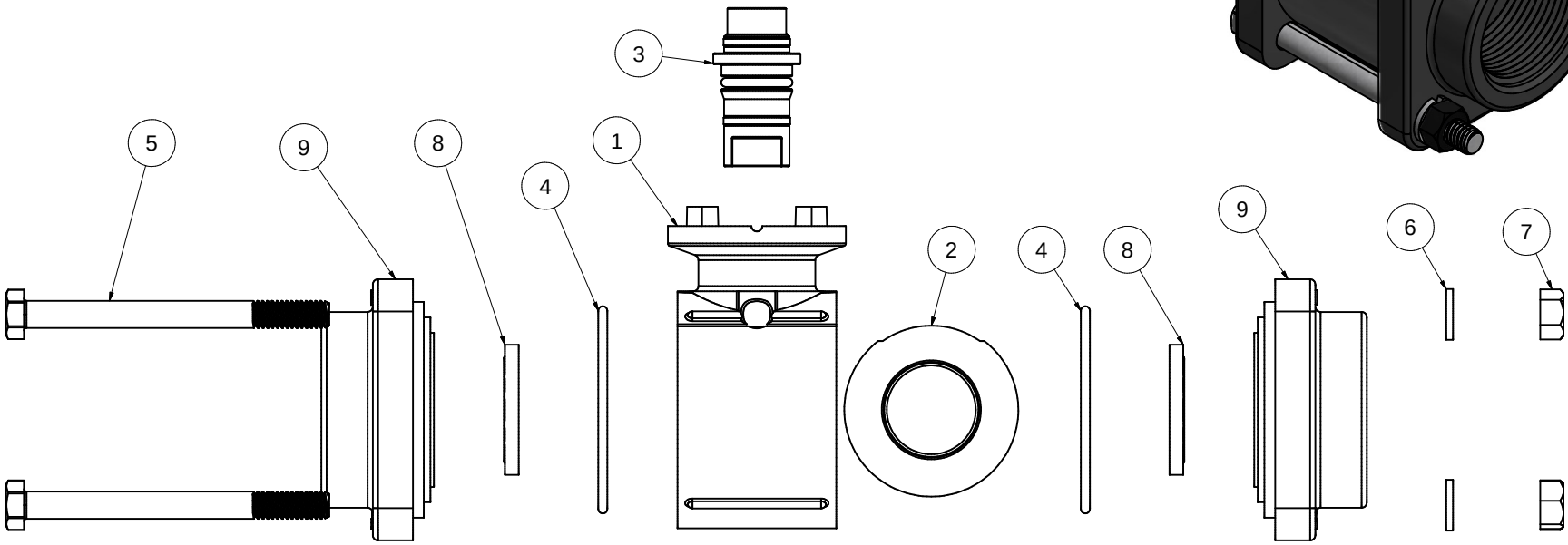

Assembly Specs:
Body Bolt Tightening Torque: 75 in-lb
Max Stem Turning Torque: 50 in-lb

THIS DRAWING AND ALL INFORMATION CONTAINED THEREON ARE THE EXCLUSIVE PROPERTY OF BANJO CORPORATION.

UNLESS SPECIFICALLY NOTED, THIS DRAWING AND ITEMS SHOWN ON THIS DRAWING ARE SUBJECT TO CHANGE AT ANY TIME.

BANJO CORPORATION
150 BANJO DRIVE, CRAWFORDSVILLE, IN 47933
WEB SITE: WWW.BANJOCORP.COM
E-MAIL: SALES1@BANJOCORP.COM

DESCRIPTION
1 1/4" VALVE SUBASSY

PART NUMBER
EV125XR1