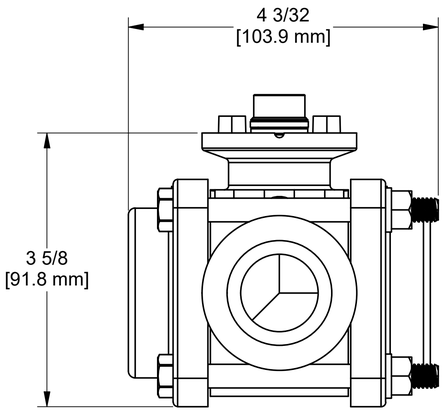

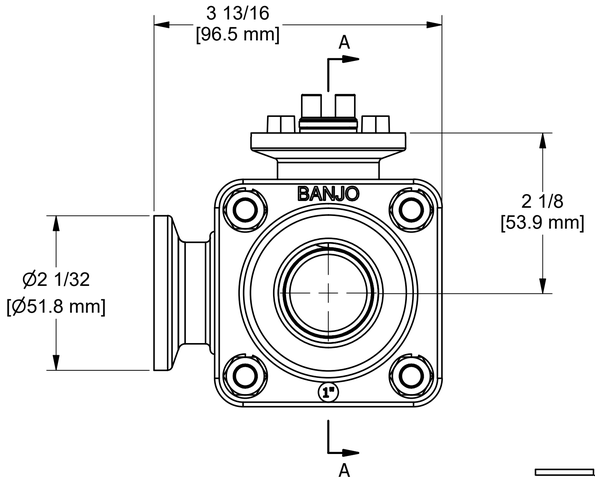

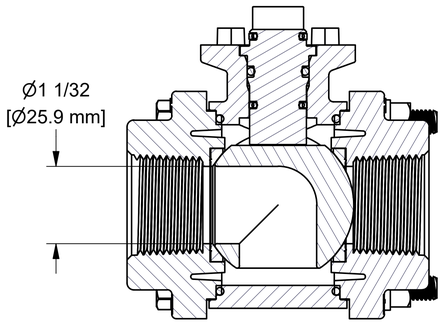

SECTION A-A
SCALE 1 : 1

PARTS LIST			
ITEM	QTY	PART NUMBER	DESCRIPTION
1	1	MEV10151	1" SS EV STEM WITH SEALS
1-1	2	FP26041	PARKER SEAL, PTFE
1-2	2	FP26041E	AS568 -015 O-RING, EPDM, BLACK
1-3	1	MEV10151SS	1" SS EV Top Load Stem
1-4	1	UV15163	AS568A -114 O-RING, EPDM, BLACK
2	1	MEV10354AS	1" FP SL MANIFOLD VE BODY, MACHINED
3	4	V10117	5/16 - 18 X 3 1/2" HHCS
4	4	V10118	5/16" LOCKWASHER
5	4	V10119	5/16"-18 SS NUT
6	2	VE10257A	1" VE ENDPLATE, MACHINED
7	2	VE10258A	1" VE SEAT TFM
8	2	VE10264E	AS568A -0139 O-RING, EPDM, BLACK
9	1	VE10355	1" FP VE 3-Way SS Ball

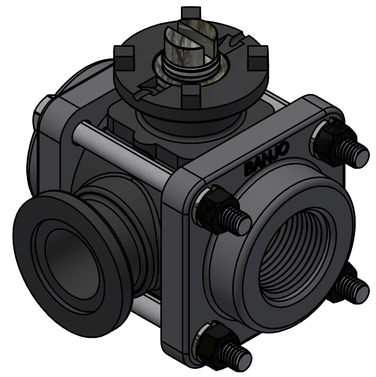

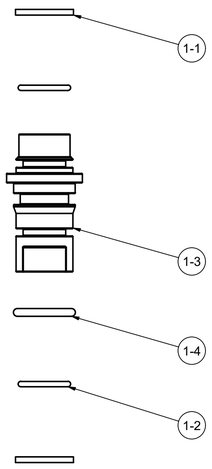

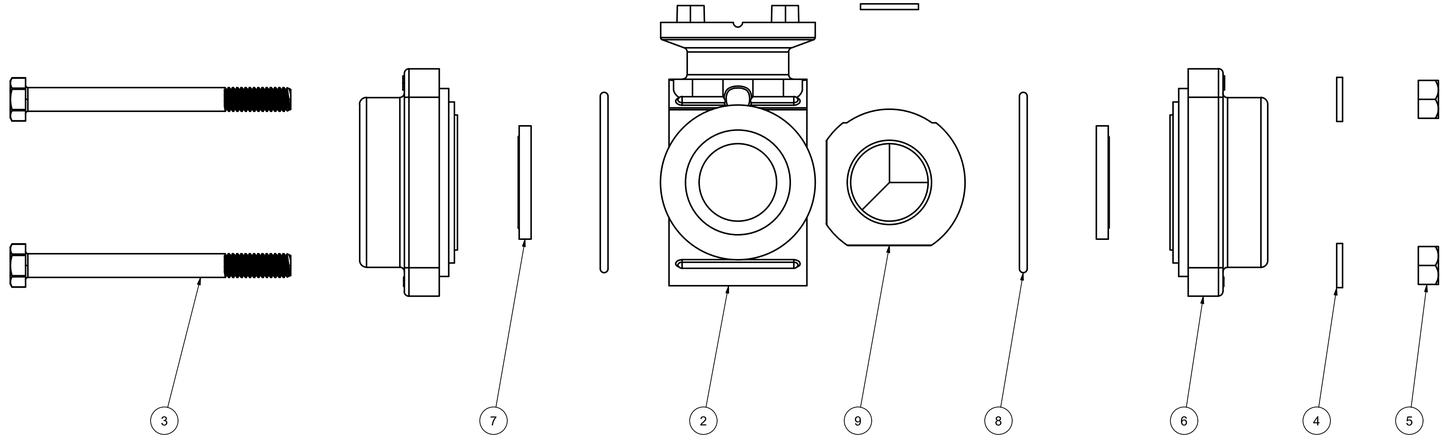

THIS DRAWING AND ALL INFORMATION CONTAINED THEREON ARE THE EXCLUSIVE PROPERTY OF BANJO CORPORATION.

UNLESS SPECIFICALLY NOTED, THIS DRAWING AND ITEMS SHOWN ON THIS DRAWING ARE SUBJECT TO CHANGE AT ANY TIME.

BANJO CORPORATION

BANJO CORPORATION
150 BANJO DRIVE, CRAWFORDSVILLE, IN 47933
WEB SITE: WWW.BANJOCORP.COM
E-MAIL: BANJOSALES@IDEXCORP.COM

DESCRIPTION

1" FP SL MANIFOLD VALVE ONLY

PART NUMBER

EV100SLXR1