Parts List			
ITEM	QTY	PART NUMBER	DESCRIPTION
1	1	EV100XR1	1" FP Valve SubAssy
2	1	EV3300	3/4 Sec, 3 Wire, EV Actuator Assy
3	1	FC100	1" HI TORQUE CLAMP
4	1	MVE004	MVE Mounting Breather

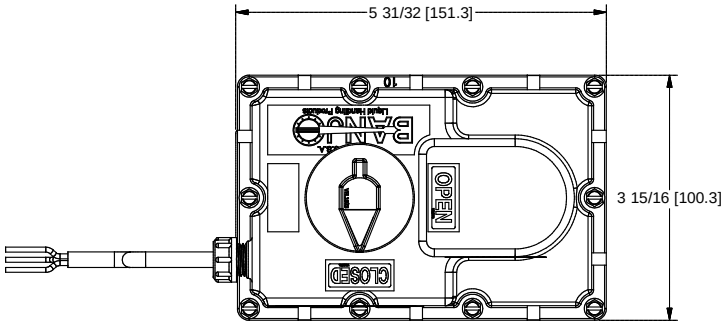

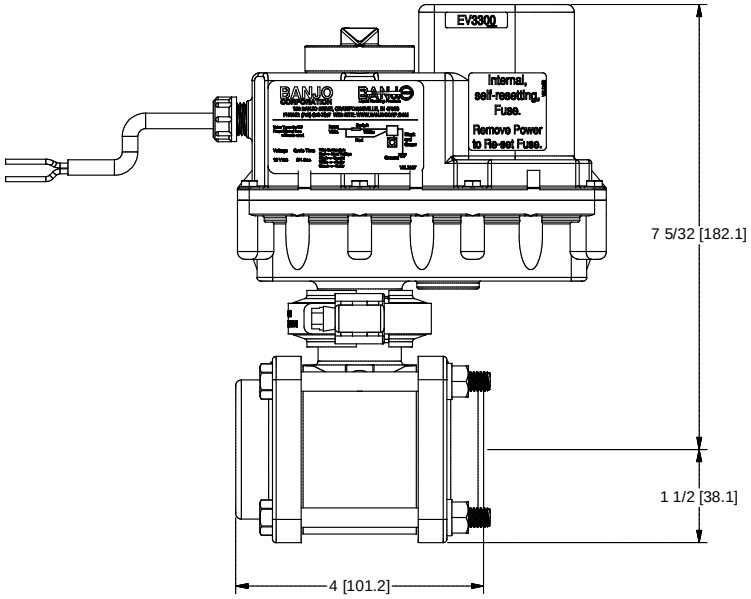

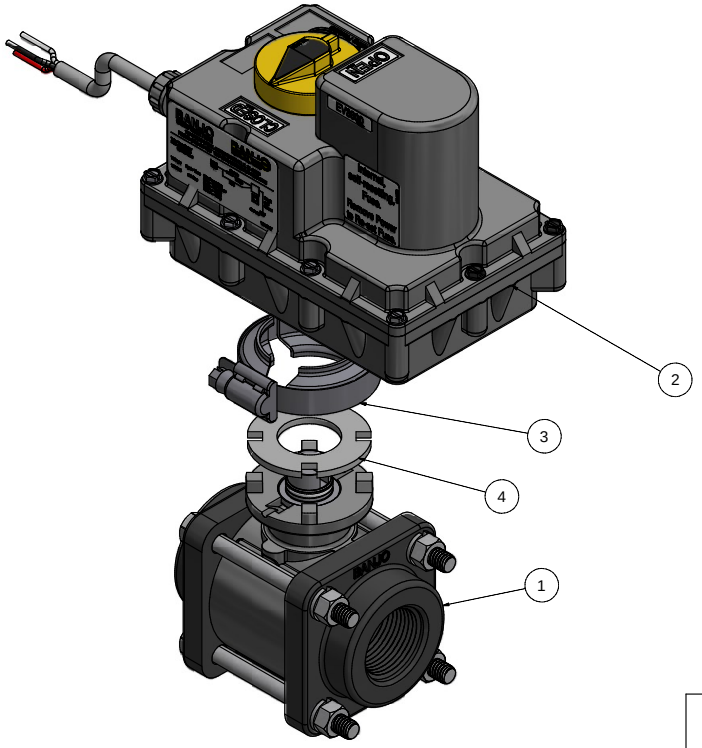

THIS DRAWING AND ALL INFORMATION CONTAINED THEREON ARE THE EXCLUSIVE PROPERTY OF BANJO CORPORATION.

UNLESS SPECIFACALLY NOTED, THIS DRAWING AND ITEMS SHOWN ON THIS DRAWING ARE SUBJECT TO CHANGE AT ANY TIME.

BANJO CORPORATION

BANJO CORPORATION
150 BANJO DRIVE, CRAWFORDSVILLE, IN 47933
WEB SITE: WWW.BANJOCORP.COM
E-MAIL: BANJOSALES@IDEXCORP.COM

DESCRIPTION
1 " FP Electric Valve 3/4 Sec, 3 Wire, On/Off

PART NUMBER
EV100FP