

ET20F-P

3-PH. 2 POLE IP23

BRUSH + AVR

MECCALTE spa - Via Roma, 20 - 36051 CREAZZO (VI) ITALY
Tel. +39 0444/396111 - Fax +39 0444/396166 - e-mail: info@meccalte.it
website: www.meccalte.com

CHARACTERISTICS

POWER 230/400V AT 3000 RPM - 50 Hz

Type	CL. H (ΔT=125°C)						CL. F (ΔT=105°C)		STAND BY (ΔT=163°C)		CL. H (ΔT=125°C)		T.H.D.
	THREE-PHASE		MOTOR STARTING CAPABILITY	EFFICIENCY %			THREE-PHASE		AMBIENT TEMPERATURE 27°C		SINGLE-PHASE DELTA CONNECTION		
	KVA	KW cos φ 0,8	kVA	2/4	3/4	4/4	kVA	kW cos φ 0,8	kVA	kW cos φ 0,8	kVA cos φ 1	MOTOR STARTING CAPABILITY kVA	%
ET20FS-130	**9**	7,2	15	78,6	82,6	81,9	8,2	6,6	9,7	7,8	6	12	< 5
ET20FS-160	**11,5**	9,2	19	78,9	82,8	82,4	10,5	8,4	12,5	10	7,6	15	< 5
ET20F-200	**13,5**	10,8	21	79,4	83,5	82,9	12,2	9,8	14,2	11,4	9	18	< 5

POWER 277/480V AT 3600 RPM - 60 Hz

Type	CL. H (ΔT=125°C)						CL. F (ΔT=105°C)		STAND BY (ΔT=163°C)		CL. H (ΔT=125°C)		T.H.D.
	THREE-PHASE		MOTOR STARTING CAPABILITY	EFFICIENCY %			THREE-PHASE		AMBIENT TEMPERATURE 27°C		SINGLE-PHASE DELTA CONNECTION		
	KVA	KW cos φ 0,8	kVA	2/4	3/4	4/4	kVA	kW cos φ 0,8	kVA	kW cos φ 0,8	kVA cos φ 1	MOTOR STARTING CAPABILITY kVA	%
ET20FS-130	**11**	8,8	18	79,8	83,9	83,6	10	8	11,6	9,3	7,2	14,5	< 5
ET20FS-160	**14**	11,2	22,5	79,8	84,5	83,9	12,5	10	15	12	9,1	18	< 5
ET20F-200	**16,5**	13,2	25	80,5	84,6	84,1	14,5	11,6	17	13,6	10,8	21,5	< 5

Type	J (Kgm²)		Weight (Kg)			Air Volume (m³/min)		Noise dB(A)			
								50 Hz		60 Hz	
	B3/B14	B3/B9	B3/B14	B3/B9	MD35	50 Hz	60 Hz	7m	1m	7m	1m
ET20FS-130	0,0241	0,0231	45,2	44,2	48,2	4,7	5,7	81	63	83	65
ET20FS-160	0,0288	0,0277	52,2	51,2	55,2	4,7	5,7	81	63	83	65
ET20F-200	0,0335	0,0323	60	59	63	4,7	5,7	81	63	83	65

TYPICAL ELECTRICAL DATA

Type		ET20FS-130	ET20FS-160	ET20F-200
Rating "H" class	kVA 50 Hz	9	11,5	13,5
Direct - axis synchronous reactance	Xd %	353	334	270
Direct - axis transient reactance	X'd %	39,2	37,4	31,9
Direct - axis subtransient reactance	X"d %	22,4	21,2	18,6
Quadrature - axis synchronous reatance	Xq %	109,3	100,9	88
Quadrature- axis transient reactance	X'q %	109,3	100,9	88
Quadrature-axis subtransient reactance	X"q %	44,3	42,6	39
Negative - sequence reactance	X_2 %	24	22,4	18
Zero sequence reactance	Xo %	8,8	8,4	6,9
Transient time constant	T'd (ms)	54	51	43
Subtransient time constant	T"d (ms)	11	10	9
Armature time constant	T α (ms)	6	7,5	9
Open circuit time constant	T'do (s)	0,65	0,58	0,5
Short - circuit ratio	Kcc	0,58	0,51	0,56
Stator winding resistance	Ω	0,712	0,569	0,425

ELECTRONIC REGULATOR	PARALLEL DEVICE	THERMAL PROTECTION			HEATERS	MECHANICAL PROTECTION		
ASR		PTC	BIMET DEVICE.	PT100		IP21	IP23	IP45
●		☐	☐	☐	☐		●	☐

● = Standard ☐ = Optional

Member of CISQ Federation
CERTIFIED MANAGEMENT SYSTEM
ISO 9001 - ISO 14001
ISO 45001

INSULATION SYSTEM

OVERALL SIZE, STANDARD TYPE

dimensions in mm.

FORM B9/25.4

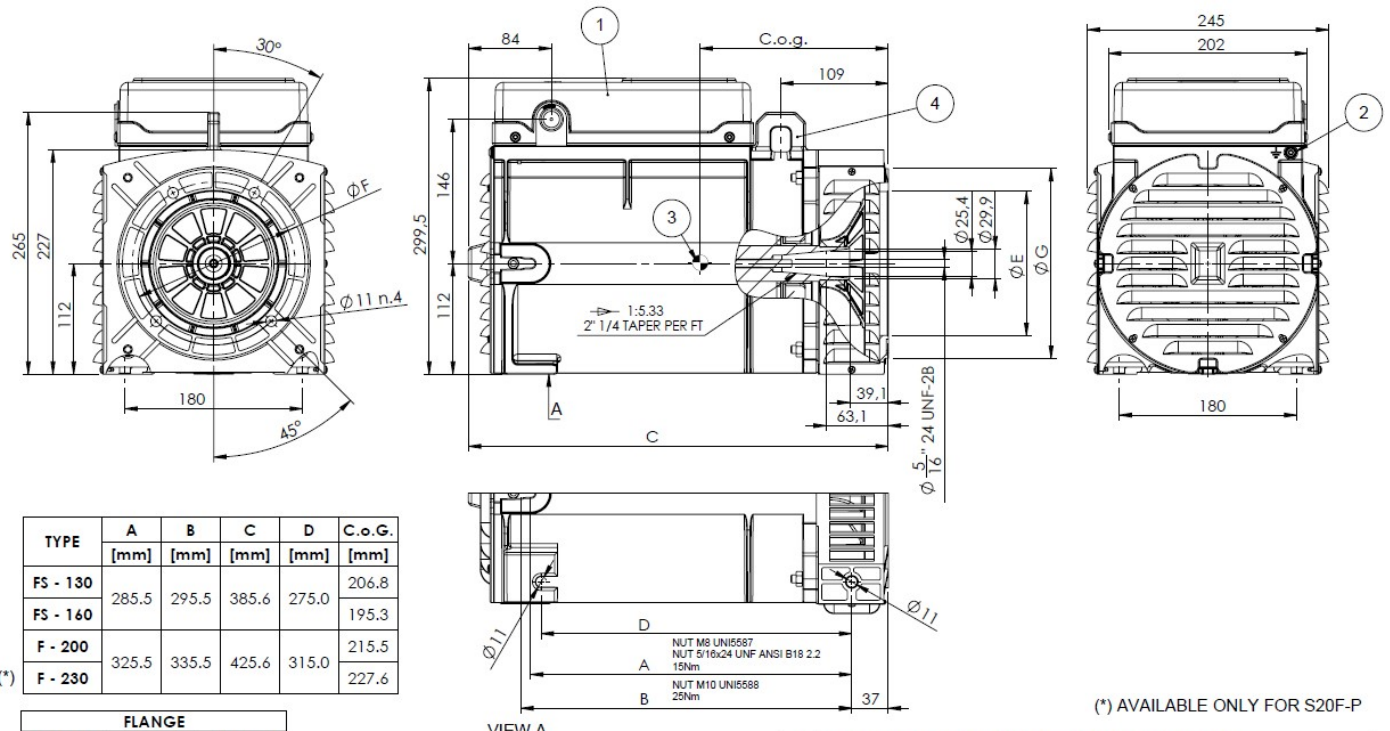

	TYPE	A [mm]	B [mm]	C [mm]	D [mm]	C.o.G. [mm]
	FS - 130	285.5	295.5	385.6	275.0	206.8
	FS - 160					195.3
	F - 200	325.5	335.5	425.6	315.0	215.5
(*)	F - 230					227.6

FLANGE		
E [mm]	F [mm]	G [mm]
146.0	165.00	192.0
163.6	196.85	216.0
177.7		

(*) AVAILABLE ONLY FOR S20F-P

1)	REMOVABLE COVER FOR ACCESS TO MAIN TERMINALS
2)	SCREW FOR GROUNDING
3)	CENTER OF GRAVITY (C.o.g.) IN CONF. S20F AND FLANGE Ø146mm
4)	LIFTING EYE - AVAILABLE ONLY FOR TYPE "F"

FORM B9/C30

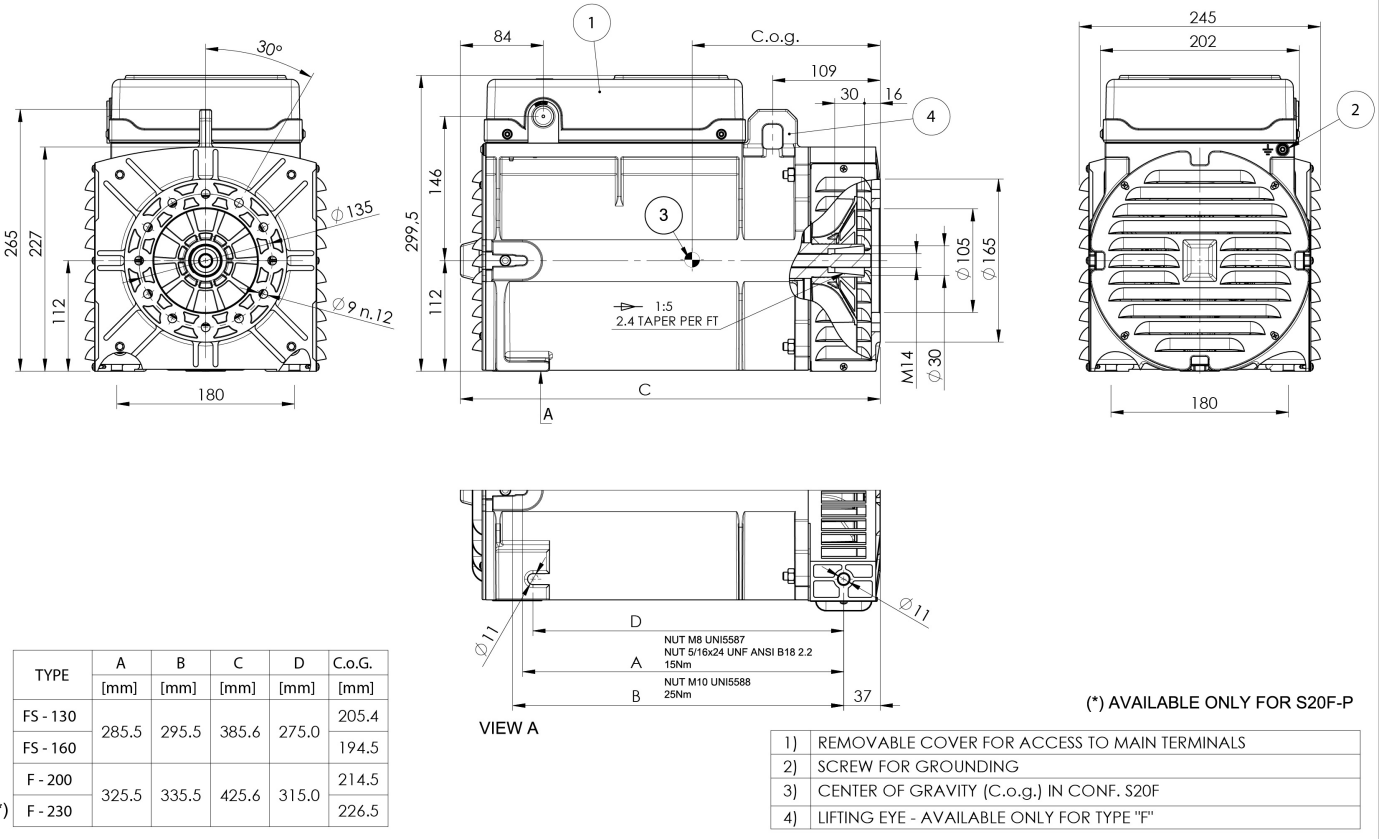

	TYPE	A [mm]	B [mm]	C [mm]	D [mm]	C.o.G. [mm]
	FS - 130	285.5	295.5	385.6	275.0	205.4
	FS - 160					194.5
	F - 200	325.5	335.5	425.6	315.0	214.5
(*)	F - 230					226.5

(*) AVAILABLE ONLY FOR S20F-P

1)	REMOVABLE COVER FOR ACCESS TO MAIN TERMINALS
2)	SCREW FOR GROUNDING
3)	CENTER OF GRAVITY (C.o.g.) IN CONF. S20F
4)	LIFTING EYE - AVAILABLE ONLY FOR TYPE "F"

OVERALL SIZE, STANDARD TYPE

FORM MD35

dimensions in mm.

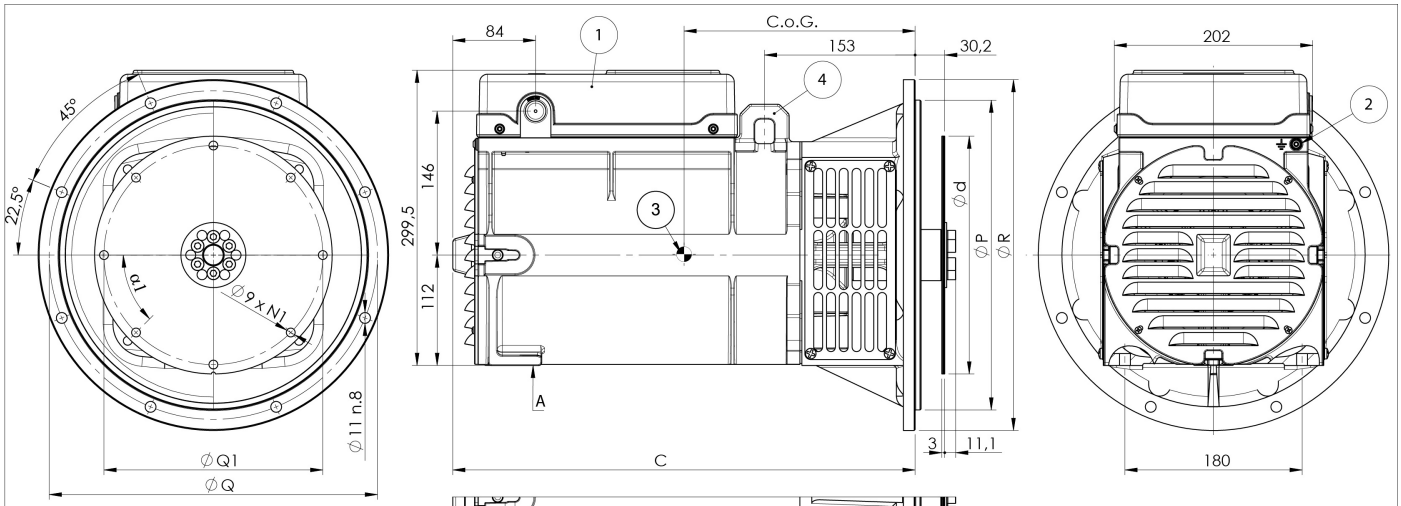

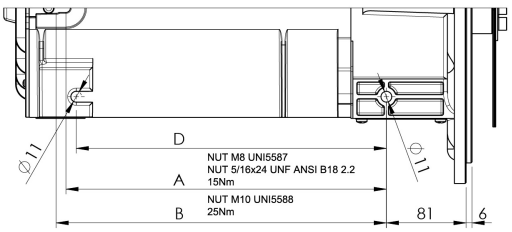

VIEW A

SAE N.	FLANGE		
	P	R	Q
6	266.7	317	285.75
5	314,3	356	333,4

SAE N.	DISC COUPLING				
	d	L	Q1	N1	α1
6 1/2	215,90	30,2	200,00	6	60°
7 1/2	241,30	30,2	222,25	8	45°

(*) AVAILABLE ONLY FOR S20F-P

	TYPE	A	B	C	D	C.o.G.
	FS - 130	285.5	295.5	429.6	275.0	227.2
	FS - 160					219.3
	F - 200	325.5	335.5	469.6	315.0	241.4
(*)	F - 230					254.1

1)	REMOVABLE COVER FOR ACCESS TO MAIN TERMINALS
2)	SCREW FOR GROUNDING
3)	CENTER OF GRAVITY (C.o.g.) IN CONF. S20F MD35/5 F.6.5
4)	LIFTING EYE - AVAILABLE ONLY FOR TYPE "F"

FORM B34

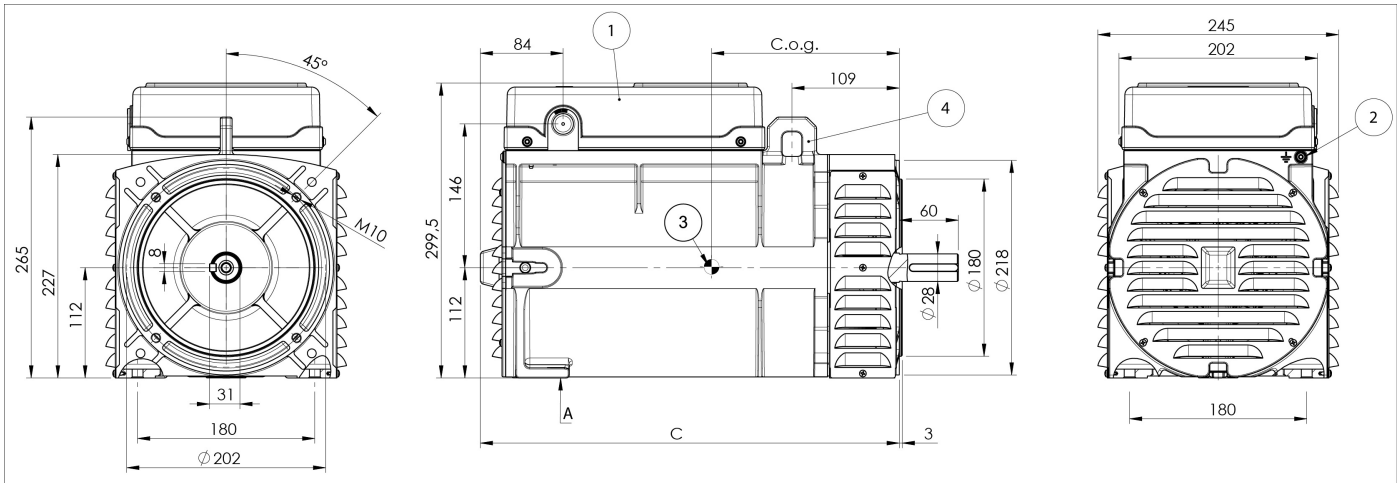

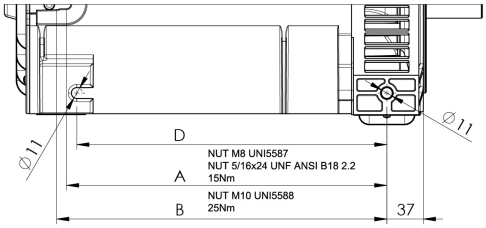

VIEW A

	TYPE	A [mm]	B [mm]	C [mm]	D [mm]	C.o.G. [mm]
	FS - 130	285.5	295.5	385.6	275.0	199.7
	FS - 160					189.3
	F - 200	325.5	335.5	425.6	315.0	210.1
(*)	F - 230					222.3

(*) AVAILABLE ONLY FOR S20F-P

1)	REMOVABLE COVER FOR ACCESS TO MAIN TERMINALS
2)	SCREW FOR GROUNDING
3)	CENTER OF GRAVITY (C.o.g.) IN CONF. S20F
4)	LIFTING EYE - AVAILABLE ONLY FOR TYPE "F"