GENERAL PUMP *A member of the Interpump Group*

ET Series

Triplex Plunger Pump, Solid Shaft, 1750 RPM

March 1, 2020 and later

TRIPLEX

FEATURES

- "HR" anti-corrosion surface treatment on manifold
- New Generation seal package
- Dust protection chamber
- Solid ceramic plungers
- Oversized plunger guide
- Optimized inlet and outlet valves
- Oversized crankcase

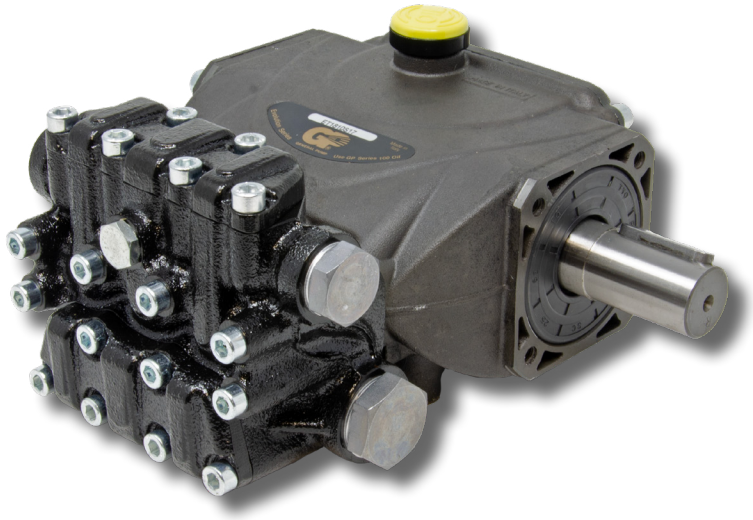

SPECIFICATIONS

Pump Model	ET1509S17	ET1807S17	ET1511S17	ET1512S17	ET1809S17	ET1810S17	ET1811S17
Maximum Volume	2.1 GPM	2.4 GPM	2.6 GPM	2.9 GPM	3.2 GPM	3.4 GPM	3.7 GPM
Maximum Discharge Pressure	2,610 PSI	2,320 PSI	2,610 PSI		2,320 PSI		
Horsepower	3.7 EBHP	3.7 EBHP	4.7 EBHP	5.1 EBHP	5.0 EBHP	5.4 EBHP	5.98 EBHP
Maximum Pump Speed	1750 RPM						
Inlet Pressures	Flooded to 70 PSI						
Plunger Bore (in / mm)	.591 in./15 mm	.708 in./18 mm	.590 in./15 mm	.590 in./15 mm	.708 in./18 mm	.708 in./18 mm	.708 in./18 mm
Plunger Stroke (in / mm)	.370 in./9.4 mm	.283 in./7.2 mm	.452 in./11.5 mm	.472 in./12 mm	.370 in./9.4 mm	.393 in./10 mm	.433 in./11 mm
Oil Capacity	8.5 oz.						
Maximum Fluid Temperature	165º F						
Inlet Port Thread	1/2"-14 BSP-F						
Discharge Port Thread	3/8"-19 BSP-F						
Shaft Diameter	.945 in./24 mm						
Weight	11.0 lbs.						
Dimensions - Nominal	8" x 7.4" x 4.7"						

TRIPLEX

Instructions and Recommendations for the Installation of *ET Series Pumps*

Maximum temperature of the water through the pump is 165ºF (73ºC).

In order to obtain maximum performance in terms of duration of seals and valves, it is necessary to respect a few simple rules, as follows:

1) **In order to avoid damage caused by cavitation, the pump must be pressure fed.**

Note: Contact General Pump's technical sales department for guidance when operating the pump outside of the related inlet specs.

2) **The plumbing which feeds the pump must be of a diameter at least equal to the inlet port.** Also, follow the suggestions below:

   a) Make the plumbing as short and straight as possible, preferably in an upward direction to facilitate the expulsion of eventual air bubbles naturally if compatible with the requirements of the system.

   b) It is always useful to put a filter at the inlet with capacity of 4 to 5 times the flow of the pump, for example for a 4 gpm (15 l/min) pump, put a filter from 16 to 20 gpm (60-75 l/mi)The mesh size suitable for this application is 0.016" (.4 mm).

   c) It is extremely important to put a pressure switch on the suction port of the pump, and in any case downstream from the filter, so that it can stop the pump should the feed pressure drop by 20% due to the filter clogging or failure of the feed pump, etc.

3) **Change of oil**

   We recommend the ***first oil change after the first 50 hours***, with the ***pump stopped*** and the ***oil still warm***.

This change is not recommended because the oil has lost its properties, but rather to eliminate the impurities that have gotten into the oil during the running-in phase. If these impurities are not removed, but are allowed to remain in the oil, they *may cause premature wear* to the moving parts and the oil seals. **After this initial change, the oil can then be changed every three months or 300 hours of operation thereafter.**

Please note: If the pump works in conditions with high humidity and with sharp temperature changes, it is possible that condensation will appear inside the crankcase, which mixing with the oil can change its properties. This is easy to see because the oil changes to a white, milky color.

If the pump does not have excessive water leaking from the packings, and the oil becomes milky, the oil has to be changed more frequently. The percentage of water in the oil must not exceed 20%.

Use oil per the following chart:

CHART OF COMPATIBLE OILS	
General Pump	Series 100
BP	VISCO 2000
CASTROL	CWX
MOBIL	SUPER
SHELL	HELIX SUPER
TOTAL	QUARTZ 4000-5000

GENERAL PUMP *A member of the Interpump Group*

ET Series
Solid Shaft - 1750 RPM

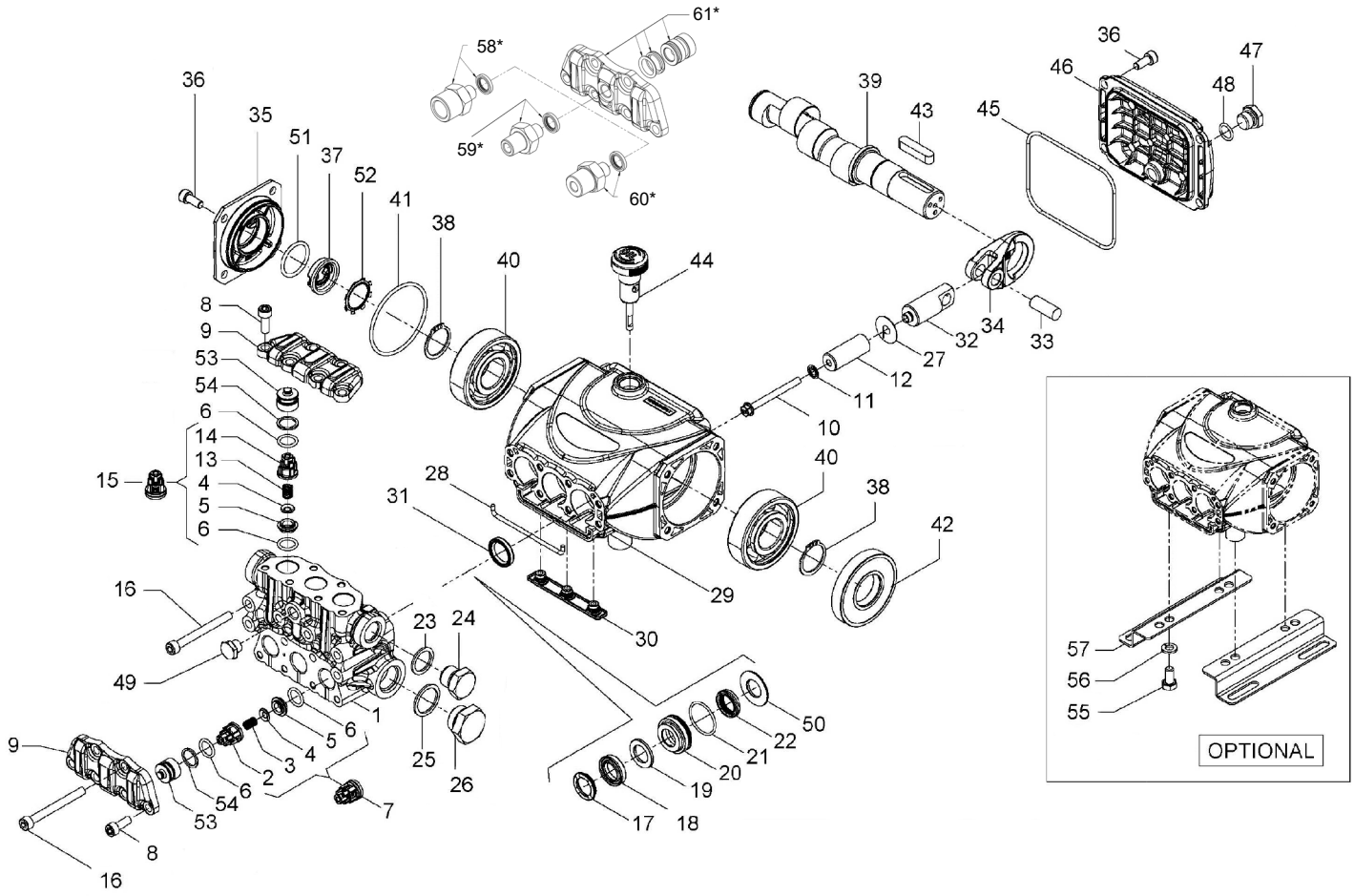

PARTS LIST

ITEM	PART NO.	DESCRIPTION	QTY
1.	53122115	Manifold, Ø 15	1
	53122215	Manifold, Ø 18	1
2.	36211951	Inlet Valve Guide	3
3.	94732600	Spring, Ø 6x12	3
4.	36211276	Valve, Spherical	6
5.	36211366	Valve Seat	12
6.	90367400	O-ring, Ø12.0x2.0	6
7.	36722401	Valve Assembly	3
8.	99185400	Screw, M6x16	10
9.	53211815	Valve Cover	2
10.	99169000	Plunger Bolt, M5x55	3
11.	96690500	Washer, Ø 5x11.5x0.4	3
12.	53040009	Plunger, Ø 15x42	3
	63040509	Plunger, Ø 18x42	3
13.	94733300	Spring, Ø 6.2x10.4	3
14.	36211151	Outlet Valve Cage Guide	3
15.	36719301	Complete Outlet Valve	3
16.	99199600	Screw, M6x70	8
17.	63101051	Head Ring, Ø 15	3
	63101151	Head Ring, Ø 18	3
18.	90261100	Packing, Ø 15, HP	3
	90265350	Packing, Ø 18, HP	3
	710031	Packing, Ø 15, HP (K312H, K313H)	3
19.	90508990	Anti-ext. Ring, Ø 15	3
	90511150	Anti-ext. Ring, Ø 18	3
20.	53210170	Support Ring, Ø 15	3
	53210270	Support Ring, Ø 18	3
21.	90360400	O-ring, 25.12x1.78	3

ITEM	PART NO.	DESCRIPTION	QTY
22.	90260800	Packing, Ø 15, LP	3
	90265000	Packing, Ø 18, LP	3
	710030	Packing, Ø 15, LP (K312H, K313H)	3
23.	93738000	Washer, Ø17.5x23x1.5	1
24.	98210050	Plug, 3/8"x13	1
25.	96751400	Washer, Ø	1
26.	98218700	Plug, 1/2" BSPx10	1
27.	96699000	Gasket, Ø 7.5x23x0.5	3
28.	53210382	Gasket, Ø3x85	1
29.	53010022	Crankcase	1
30.	58210451	Drip Cover	1
31.	90159300	Oil Seal, Ø 18x24x4.4	3
32.	53050066	Piston Guide	3
33.	97733800	Piston Pin, Ø 10x26.5	3
34.	53030022	Connecting Rod	3
35.	53150022	Crankcase Side Cover	1
36.	99183700	Screw, M6x16	8
37.	53210851	Oil Sight Glass	1
38.	90063500	Stop Ring	2
39.	60021235	Crankshaft, 9.4 mm (ET1509S17, ET1809S17)	1
	60020765	Crankshaft, 7.2mm (ET1807S17)	1
	60021735	Crankshaft, 11.5 mm (ET1511S17)	1
	53020135	Crankshaft, 12 mm (ET1512S17)	1
	60028335	Crankshaft, 10 mm (ET1810S17)	1

ITEM	PART NO.	DESCRIPTION	QTY
	60028435	Crankshaft, 11 mm (ET1811S17)	1
40.	91832800	Bearing, Premium	2
41.	90389800	O-ring, Ø 56.82x2.62	1
42.	90164100	Oil Seal, Ø 25x62x10	1
43.	91489200	Key, 8x7x35	1
44.	98210800	Oil Dipstick	1
45.	90391700	O-ring, Ø 88.57X2.62	1
46.	53160022	Rear Cover	1
47.	98204250	Plug, 1/4"x9	1
48.	701013	O-ring, Ø 10.82x1.78	1
49.	98196800	Plug, 1/8"x8	1
50.	53210670	Support Ring, Ø15	3
	53210770	Support Ring, Ø18	3
51.	90385900	O-ring, Ø 25.7x2.62	1
52.	90067100	Stop Ring	1
53.	36217851	Inlet/Outlet Valve Cap	6
54.	90509300	Ring, Ø 16.4x13.2x1.3	6
55.	99303700	Screw, M8x16	4
56.	96701600	Washer, Ø 8.4x14.4x2.0	4
57.	50200074	Pump Foot	2
58.*	101162	Kit, ADTR, 1/4"-F, SS, W/Seal	1
59.*	101157	Kit, ADTR, 1/4"-M, SS, W/Seal	1
60.*	101158	Kit, ADTR, 3/8"-K, SS, W/Seal	1
61*	K423	Kit, Tapped Valve Plate W/ Valve Spacer & Seals	1

* Optional Parts

** 53150001 Oil Level Indicator Assembled W/O Screws and O-ring

GENERAL PUMP *A member of the Interpump Group*

ET Series
Solid Shaft - 1750 RPM

REPAIR KITS

KIT NO.	K309	K310	K311	Ø 15				Ø 18	
				312	K312H[1] (Hot Kit)	K313	K313H[1] (Hot Kit)	K314	K315
ITEM NO'S INCLUDED IN KIT	2, 3, 4, 5, 6, 13, 14, (7), (15)	8, 9,	31	17, 18, 19, 21, 22	18, 22	17, 18, 19, 20, 21, 22, 50	17, 18, 19, 20, 21, 22, 50	17, 18, 19, 21, 22	17, 18, 19, 20, 21, 22, 50
NUMBER OF ASSY'S IN KIT	6	6	3	3	3	1	3	3	1
NO. OF CYLINDERS KIT SERVICES	3	3	3	3	3	1	3	3	1

[1] Note: Seal tools included

TORQUE SPECS*

Position	Ft.-Lbs.	Nm.
8	8.9	12
10	4.4	6
16	8.9	12
24**	30	40
26	30	40
36	7.4	10
47	14.8	20
49**	9.6	13

*Decrease torque by 20% if threads are lubricated.
**Use Loctite 542 Red

DIMENSIONS

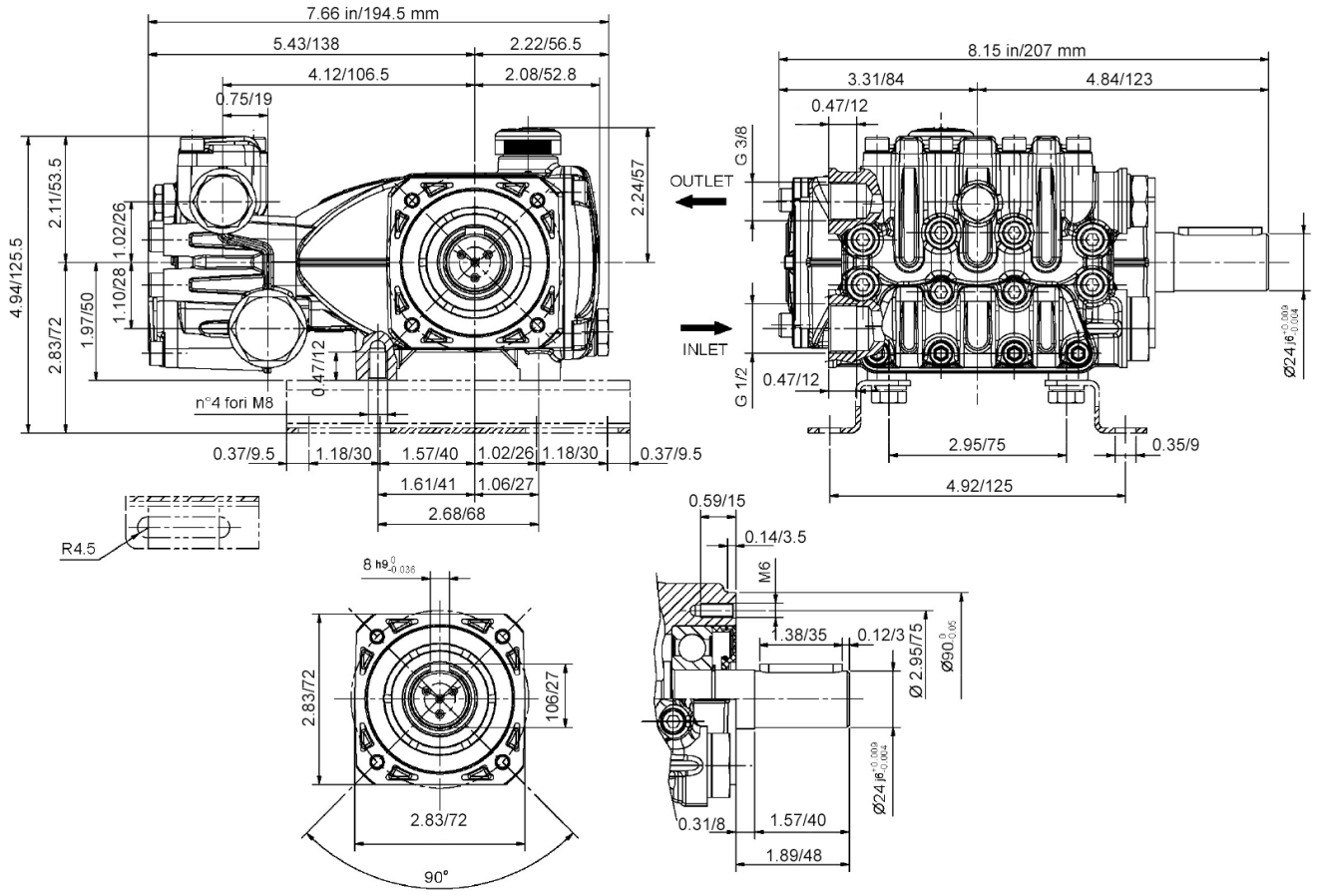

WARNING: High Pressure Systems require a primary pressure regulating device (i.e. regulator, unloader) and a secondary pressure relief device (i.e. pop-off valve, relief valve). Failure to install such relief devices properly could result in personal injury or damage to pump or property. GP does not assume any liability or responsibility for the operation of the user's high pressure system.

WARNING: This product can expose you to chemicals including lead, which is know to the state of California to cause cancer and birth defects or other reproductive harm. For more information, go to www.P65Warnings.ca.gov

GENERAL PUMP 1174 Northland Drive • Mendota Heights, MN 55120
Phone: 651.686.2199 • Fax: 800.535.1745 • e-mail: sales@gpcompanies.com • www.generalpump.com

Ref 300969 Rev. G
10-24