

ET16F

3-PH. 2 POLE IP23

BRUSH + AVR

MECCALTE spa - Via Roma, 20 - 36051 CREAZZO (VI) ITALY
Tel. +39 0444/396111 - Fax +39 0444/396166 - e-mail: info@meccalte.it
website: www.meccalte.com

CHARACTERISTICS

POWER 230/400V AT 3000 RPM - 50 Hz

Type	CL. H (ΔT=125°C)						CL. F (ΔT=105°C)		STAND BY (ΔT=163°C)		CL. H (ΔT=125°C)		T.H.D.
	THREE-PHASE		MOTOR STARTING CAPABILITY	EFFICIENCY %			THREE-PHASE		AMBIENT TEMPERATURE 27°C		SINGLE-PHASE DELTA CONNECTION		
	KVA	KW cos φ 0,8	kVA	2/4	3/4	4/4	kVA	kW cos φ 0,8	kVA	kW cos φ 0,8	kVA cos φ 1	MOTOR STARTING CAPABILITY kVA	%
ET16F-130	5,5	4,4	9,5	76,1	80,4	80,2	5	4	5,8	4,6	3,6	7	< 5
ET16F-160	6,5	5,2	10,5	78,5	82,7	82,3	5,8	4,6	7	5,6	4,3	8,5	< 5

POWER 277/480V AT 3600 RPM - 60 Hz

Type	CL. H (ΔT=125°C)						CL. F (ΔT=105°C)		STAND BY (ΔT=163°C)		CL. H (ΔT=125°C)		T.H.D.
	THREE-PHASE		MOTOR STARTING CAPABILITY	EFFICIENCY %			THREE-PHASE		AMBIENT TEMPERATURE 27°C		SINGLE-PHASE DELTA CONNECTION		
	KVA	KW cos φ 0,8	kVA	2/4	3/4	4/4	kVA	kW cos φ 0,8	kVA	kW cos φ 0,8	kVA cos φ 1	MOTOR STARTING CAPABILITY kVA	%
ET16F-130	6,6	5,3	11,4	76,5	80,8	80,6	6	4,8	7	5,6	4,3	8,5	< 5
ET16F-160	7,8	6,2	12,5	78,5	82,8	82,5	7	5,6	8,4	6,7	5,2	10,2	< 5

Type	J (Kgm²)	Weight (Kg)	Air Volume (m³/min)		Noise dB(A)			
					50 Hz		60 Hz	
			50 Hz	60 Hz	7m	1m	7m	1m
ET16F-130	0,0129	30	3,4	4,3	60	78	62	80
ET16F-160	0,0156	34	3,4	4,3	60	78	62	80

TYPICAL ELECTRICAL DATA

Type		ET16F-130	ET16F-160
Rating "H" class	kVA 50 Hz	5,5	6,5
Direct - axis synchronous reactance	Xd %	303	249
Direct - axis transient reactance	X'd %	40,8	38,1
Direct - axis subtransient reactance	X''d %	20	18,6
Quadrature - axis synchronous reatance	Xq %	100	96,2
Quadrature- axis transient reactance	X'q %	100	96,2
Quadrature-axis subtransient reactance	X''q %	37,2	35,5
Negative - sequence reactance	X_2 %	21,6	18,6
Zero sequence reactance	Xo %	8,2	7,1
Transient time constant	T'd (ms)	41	38
Subtransient time constant	T''d (ms)	10	9
Armature time constant	T α (ms)	5	6
Open circuit time constant	T'do (s)	0,8	0,9
Short - circuit ratio	Kcc	0,82	0,85
Stator winding resistance	Ω	1,5	1,15

ELECTRONIC REGULATOR	PARALLEL DEVICE	THERMAL PROTECTION			HEATERS	MECHANICAL PROTECTION		
ASR		PTC	BIMET DEVICE.	PT100		IP21	IP23	IP45
●		☐	☐	☐	☐		●	☐

● = Standard ☐ = Optional

Member of CISQ Federation RINA ISO 9001:2008 Certified Quality System

INSULATION SYSTEM

OVERALL SIZE, STANDARD TYPE

dimensions in mm

FORM B14

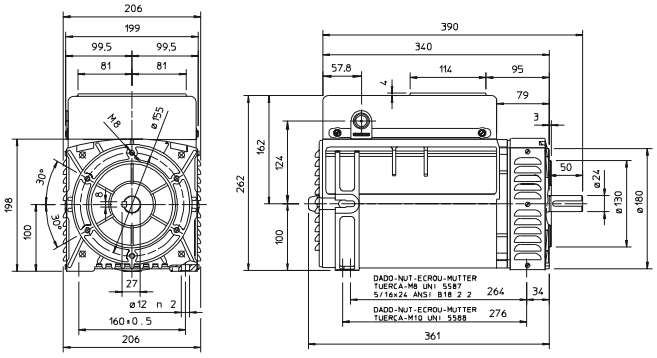

FORM J609a

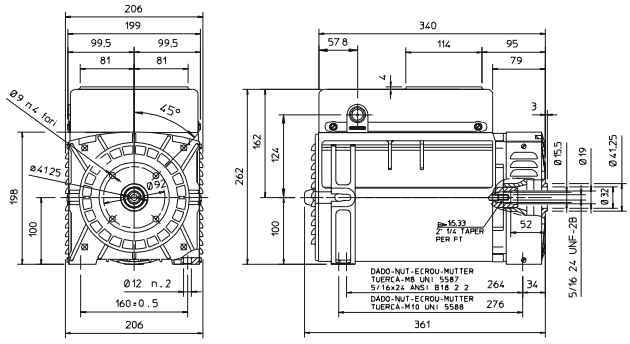

FORM B9/c23

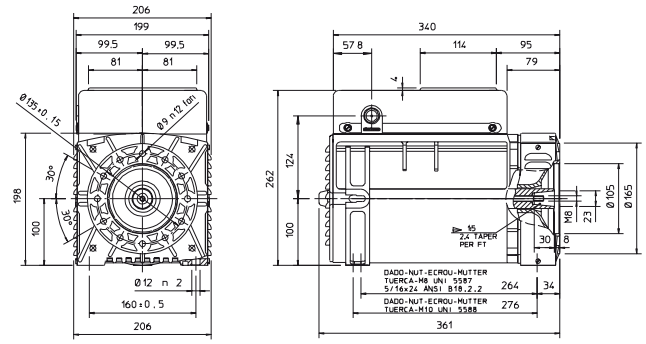

FORM J609b

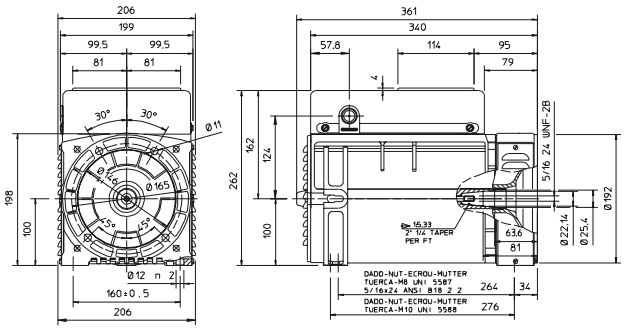

OVERALL SIZE WITH ELECTRIC PANELBOARD TYPE

dimensions in mm

FORM B14

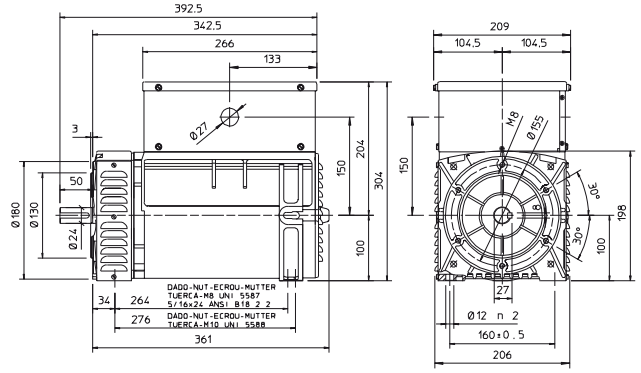

FORM J609a

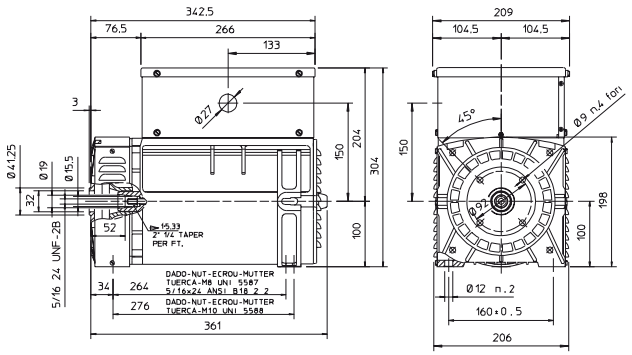

FORM B9/c23

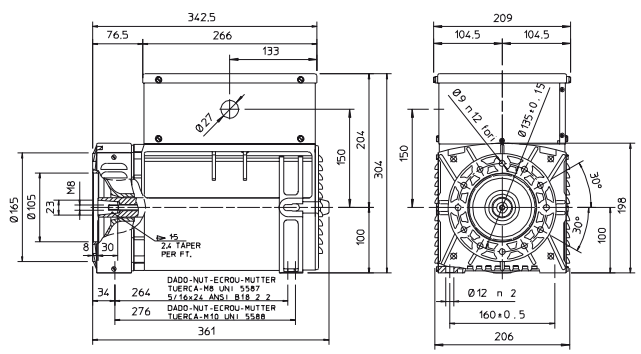

FORM J609b

