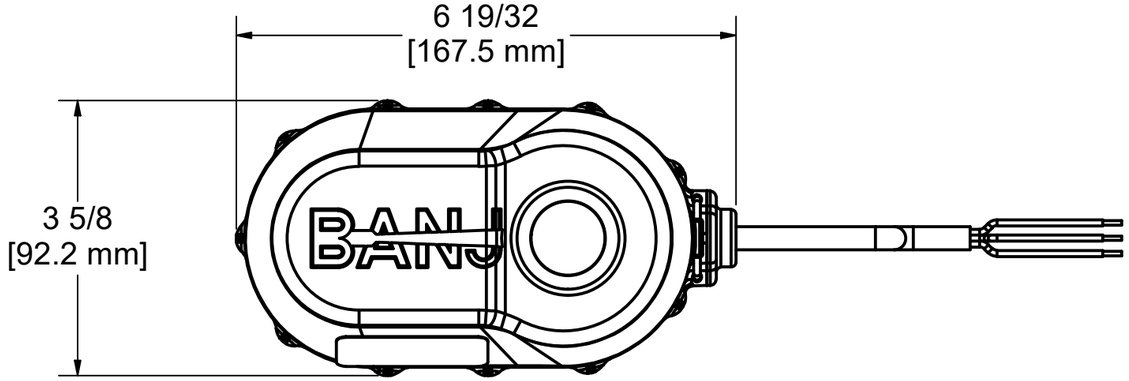

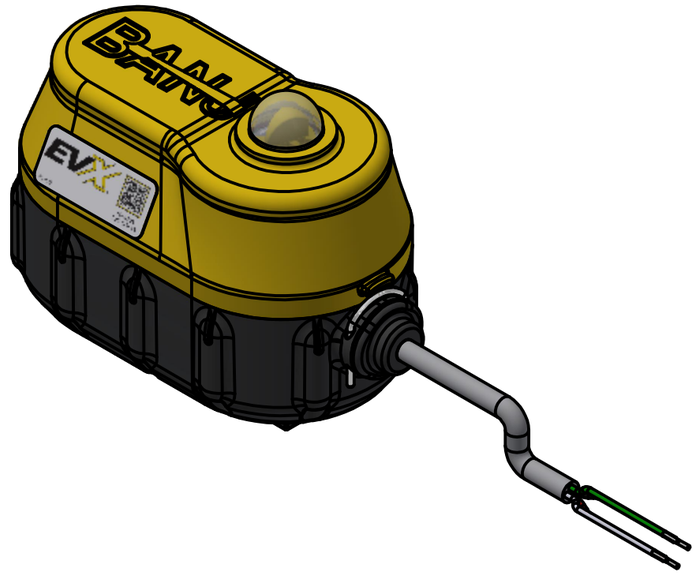

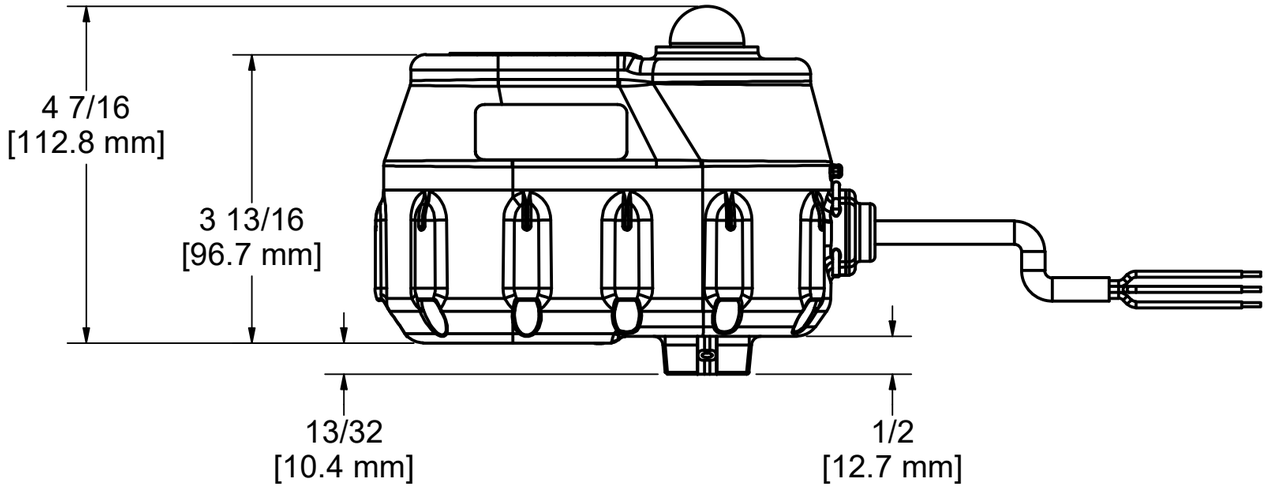

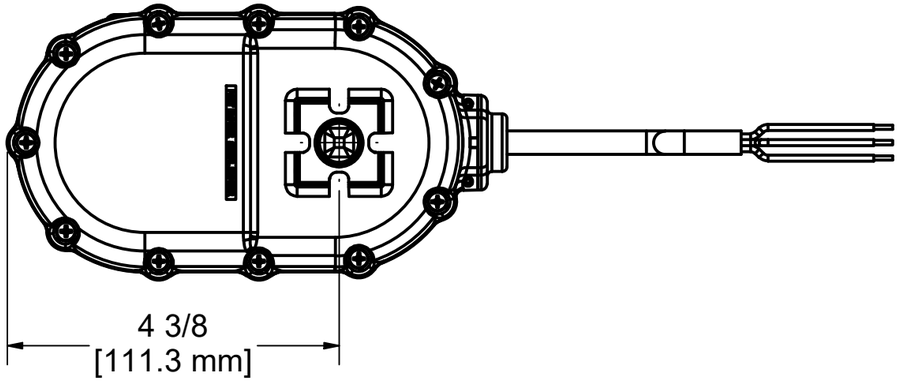

WIRING:

BLACK = GND
RED = +12VDC
GREEN = CAN LOW
WHITE = CAN HIGH

WIRE LENGTH: 18" ± 1"

THIS DRAWING AND ALL INFORMATION CONTAINED THEREON ARE THE EXCLUSIVE PROPERTY OF BANJO CORPORATION.

UNLESS SPECIFICALLY NOTED, THIS DRAWING AND ITEMS SHOWN ON THIS DRAWING ARE SUBJECT TO CHANGE AT any TIME.

BANJO CORPORATION
150 BANJO DRIVE, CRAWFORDSVILLE, IN 47933
WEB SITE: WWW.BANJOCORP.COM
E-MAIL: BANJOSALES@IDEXCORP.COM

DESCRIPTION
EVX ACT 4S J1939 CANBUS STD 4W 9-27 VDC

PART NUMBER
EP31C89430