Parts List			
ITEM	QTY	PART NUMBER	DESCRIPTION
1	1	EP31B10310	EVX ACT 1.5S WWC 3W
2	3	VE018	Deutsch Pin SZ 16-18 AWG
3	1	VE019	DEUTSCH IPD 3 WAY RECEPT DT SERIES
4	1	VE020	Deutsch DT Wedgelock W3P

WIRING:

PIN A: BLACK = GND
PIN B: WHITE = +12VDC (OPEN), 0VDC (CLOSE)
PIN C: RED = +12VDC

WIRE LENGTH: 18" ± 1" FROM HOUSING

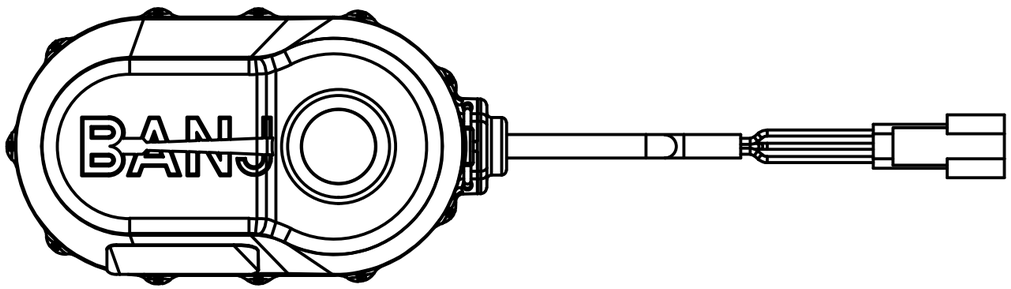

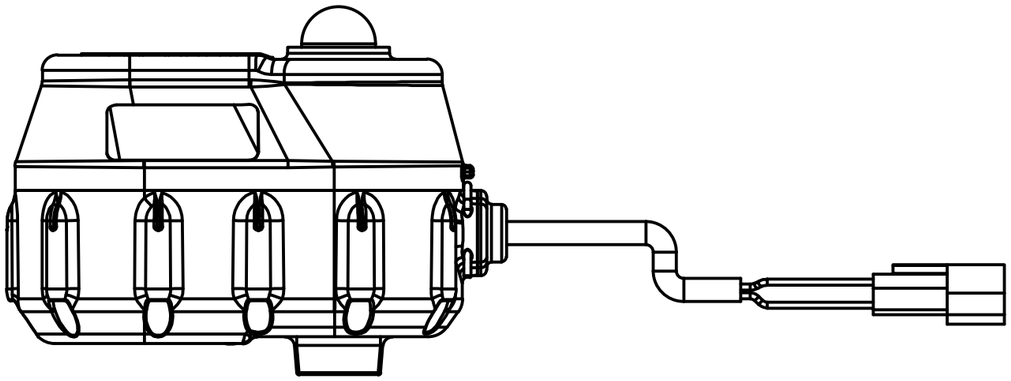

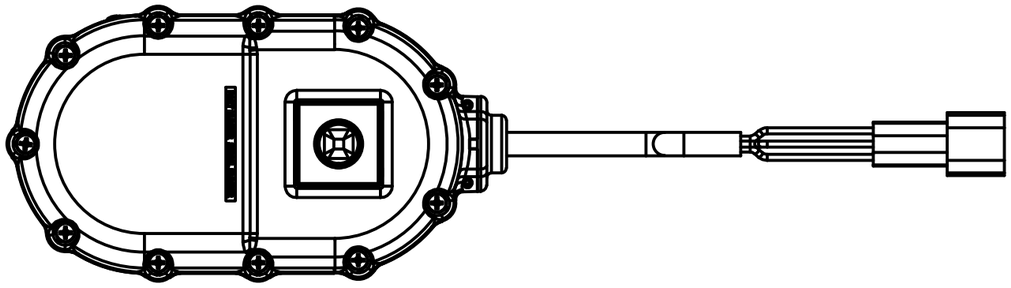

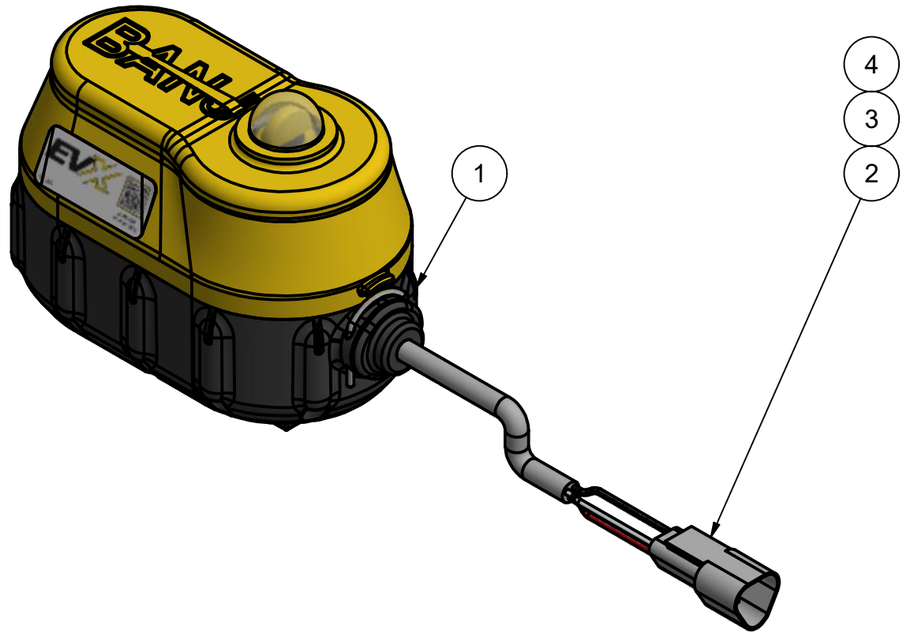

THIS DRAWING AND ALL INFORMATION CONTAINED THEREON ARE THE EXCLUSIVE PROPERTY OF BANJO CORPORATION.

UNLESS SPECIFICALLY NOTED, THIS DRAWING AND ITEMS SHOWN ON THIS DRAWING ARE SUBJECT TO CHANGE AT ANY TIME.

BANJO CORPORATION
150 BANJO DRIVE, CRAWFORDSVILLE, IN 47933
WEB SITE: WWW.BANJOCORP.COM
E-MAIL: BANJOSALES@IDEXCORP.COM

DESCRIPTION
EVX ACT 1.5S WWC 3W ARBBCW

PART NUMBER
EP31B10310C10