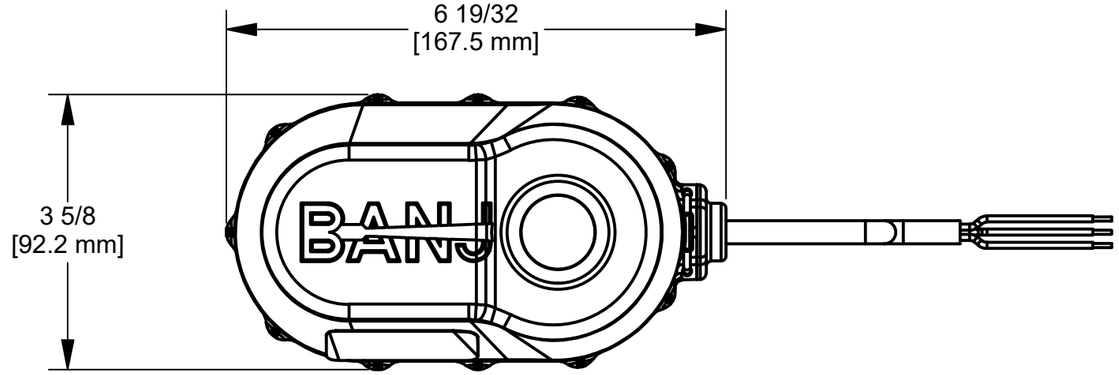

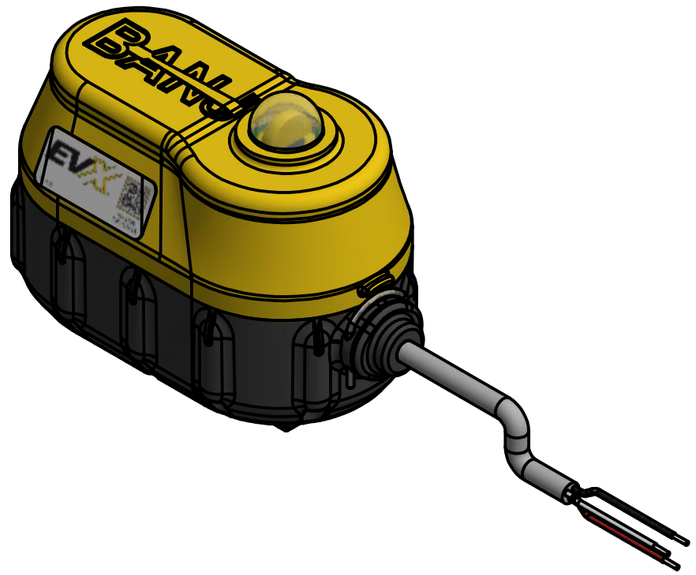

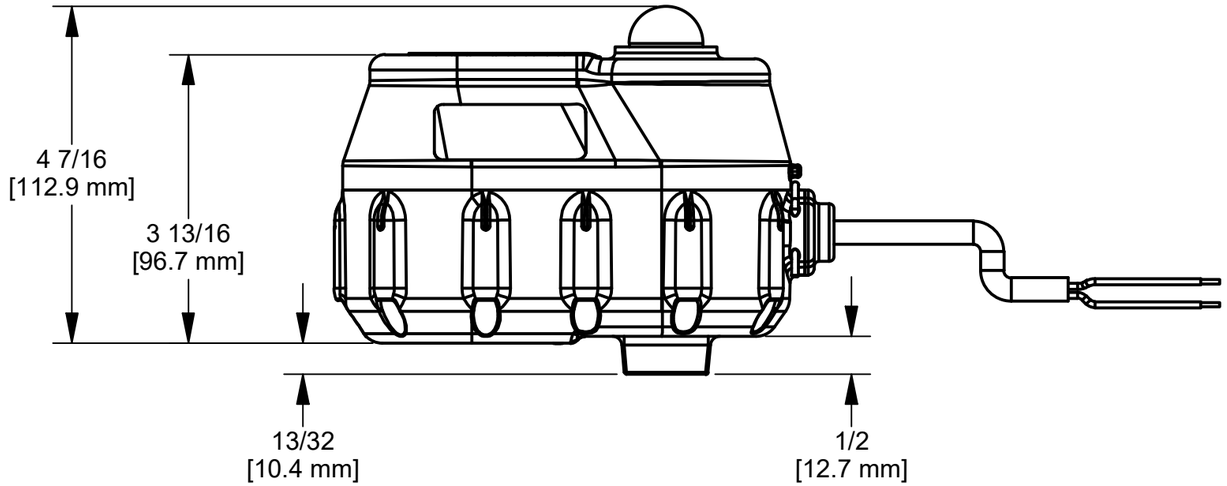

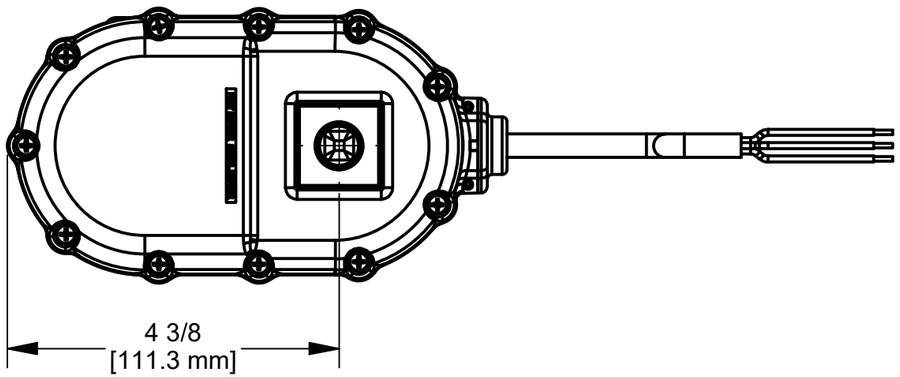

NOTES:

WIRING:
RED = +24VDC
BLACK = GND
WHITE = +24VDC (OPEN), 0VDC (CLOSE)

WIRE LENGTH: 18" ±1" FROM HOUSING.

THIS DRAWING AND ALL INFORMATION CONTAINED THEREON ARE THE EXCLUSIVE PROPERTY OF BANJO CORPORATION.

UNLESS SPECIFICALLY NOTED, THIS DRAWING AND ITEMS SHOWN ON THIS DRAWING ARE SUBJECT TO CHANGE AT ANY TIME.

BANJO CORPORATION
150 BANJO DRIVE, CRAWFORDSVILLE, IN 47933
WEB SITE: WWW.BANJOCORP.COM
E-MAIL: BANJOSALES@IDEXCORP.COM

DESCRIPTION
EVX ACT LV2 0.75S WWC 3W

PART NUMBER
EP21A20310