TRIPLEX

GENERAL PUMP *A member of the Interpump Group*

EP Series

Triplex Plunger Pump, 1” Hollow Shaft

FEATURES

- Triplex plunger pump
- New Forged brass manifold , increases working pressure to 4,000 PSI
- New plunger guide bushing (patent pending)
- Solid ceramic plungers with dual guide system
- New dual diameter plunger guide
- New optimized outlet valves
- New dual lip oil seal
- 1” Hollow shaft, flanged for direct couple to gas engines (SAE J609B)



SPECIFICATIONS

Pump Model	EP1506G8	EP1508G8	EP1509G8	EP1510G8	EP1306G8	EP1308G8	EP1309G8	EP1310G8	EP1311G8	EP1313G8
Maximum Volume at 3400 RPM	2.9 GPM	3.4 GPM	3.7 GPM	4.2 GPM	2.1 GPM	2.6 GPM	2.9 GPM	3.2 GPM	3.4 GPM	4.0 GPM
Maximum Volume at 1750 RPM				2.4 GPM						2.4 GPM
Maximum Discharge Pressure	3,045 PSI		3,000 PSI		4,000					
Horsepower	9.0 GHP	10.6 GHP	11.4 GHP	13.0 GHP	8.6 GHP	10.7 GHP	11.9 GHP	13.2 GHP	14.0 GHP	16.4 GHP
Maximum Pump Speed	3400 RPM									
Maximum Inlet Pressure	Flooded to 70 PSI									
Plunger Bore	.591 in/15 mm				.512 in./13 mm					
Plunger Stroke	.236 in./6mm	.315 in./8mm	.354 in./9mm	.394 in./10mm	.236 in./6mm	.315 in./8mm	.354 in./9mm	.394 in./10mm	.433 in./11mm	.512 in./13 mm
Oil Capacity	15 oz.									
Maximum Fluid Temperature	165º F									
Inlet Port Thread	1/2”-14 BSP-F									
Discharge Port Thread	3/8”-19 BSP-F									
Shaft Diameter	1 in./25.4 mm									
Weight	15.9 lbs.									
Dimensions	9.5”x9.5”x6.45”									

TRIPLEX

General Pump
is a member of
the Interpump Group

QUALITY SYSTEM CERTIFICATION DNV·GL ISO 9001

Ref 300922 Rev. L
09-24

GENERAL PUMP

Instructions and Recommendations for the Installation of *EP Series Pumps*

Maximum temperature of the water through the pump is 165ºF (73ºC).

In order to obtain maximum performance in terms of duration of seals and valves, it is necessary to respect a few simple rules, as follows:

1) **In order to avoid damage caused by cavitation, the pump must be pressure fed.**

Note: Contact General Pump's technical sales department for guidance when operating the pump outside of the related inlet specs.

2) **The plumbing which feeds the pump must be of a diameter at least equal to the inlet port.** Also, follow the suggestions below:

   a) Make the plumbing as short and straight as possible, preferably in an upward direction to facilitate the expulsion of eventual air bubbles naturally if compatible with the requirements of the system.

   b) It is always useful to put a filter at the inlet with capacity of 4 to 5 times the flow of the pump, for example for a 4 gpm (15 l/min) pump, put a filter from 16 to 20 gpm (60-75 l/mi)The mesh size suitable for this application is 0.016" (.4 mm).

   c) It is extremely important to put a pressure switch on the suction port of the pump, and in any case downstream from the filter, so that it can stop the pump should the feed pressure drop by 20% due to the filter clogging or failure of the feed pump, etc.

3) **Change of oil**

   We recommend the ***first oil change after the first 50 hours***, with the ***pump stopped*** and the ***oil still warm***.

This change is not recommended because the oil has lost its properties, but rather to eliminate the impurities that have gotten into the oil during the running-in phase. If these impurities are not removed, but are allowed to remain in the oil, they *may cause premature wear* to the moving parts and the oil seals. **After this initial change, the oil can then be changed every three months or 300 hours of operation thereafter.**

Please note: If the pump works in conditions with high humidity and with sharp temperature changes, it is possible that condensation will appear inside the crankcase, which mixing with the oil can change its properties. This is easy to see because the oil changes to a white, milky color.

If the pump does not have excessive water leaking from the packings, and the oil becomes milky, the oil has to be changed more frequently. The percentage of water in the oil must not exceed 20%.

Use oil per the following chart:

CHART OF COMPATIBLE OILS	
General Pump	Series 100
BP	VISCO 2000
CASTROL	CWX
MOBIL	SUPER
SHELL	HELIX SUPER
TOTAL	QUARTZ 4000-5000

GENERAL PUMP *A member of the Interpump Group*

EP Series
1” Hollow Shaft - Gas

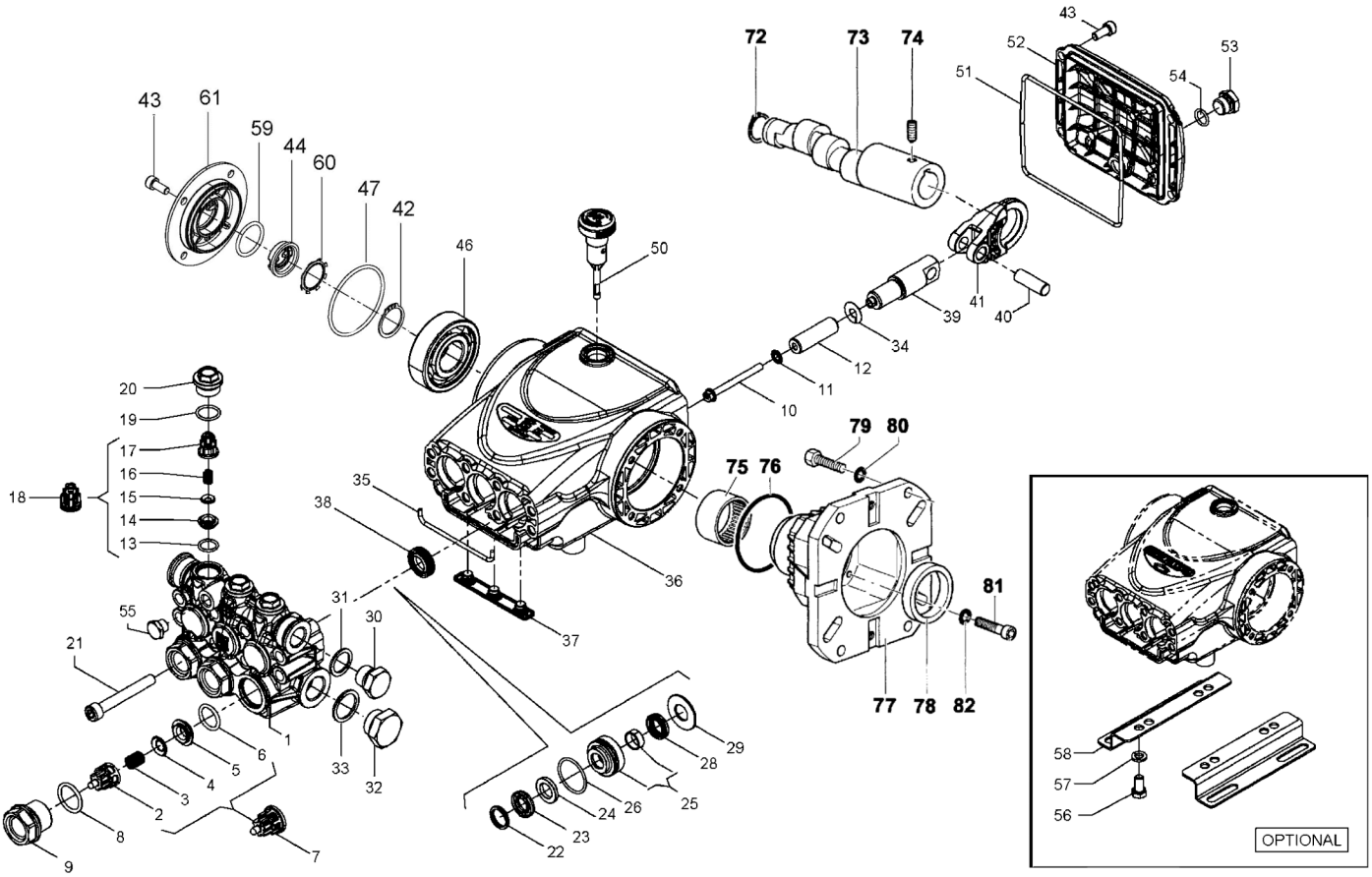

PARTS LIST

ITEM	PART NO.	DESCRIPTION	QTY
1.	58120041	Manifold, Ø 13	1
	58120141	Manifold, Ø 15	1
2.	36202551	Valve Cage	3
3.	94737600	Spring, Ø 9.4x14.8	3
4.	36200176	Valve	3
5.	36200366	Valve Seat	3
6.	701115	O-ring, Ø17.13v2.62	3
7.	36711501	Valve Assembly	3
8.	701002	O-ring, Ø20.24x2.62	3
9.	98222600	Valve Cap, M24x1.5x16.7	3
10.	99169000	Plunger Bolt, M5x55	3
11.	96690500	Washer, Ø 5x11.5x0.4	3
12.	58040009	Plunger, Ø 13x42	3
	58040109	Plunger, Ø 15x42	3
13.	701014	O-ring, Ø 12.42x1.78	3
14.	36211366	Outlet Valve Seat	3
15.	36211276	Outlet Valve Poppet	3
16.	94733300	Spring, Ø 6.2x10.4	3
17.	36211151	Outlet Valve Cage Guide	3
18.	36719301	Complete Outlet Valve	3
19.	701016	O-ring, Ø 15.6x1.78	3
20.	98213700	Outlet Valve Cap, M18x1.5x10	3
21.	99317500	Screw, M8x60	8
22.	44100251	Head Ring, Ø 13	3
	63101051	Head Ring, Ø 15	3
23.	90260200	Packing, Ø 13, HP	3
	90261100	Packing, Ø 15, HP	3
	710031	Packing, Ø 15, HP (K276H, K312H)	3
24.	90507650	Anti-ext. Ring, Ø 13	3
	90508990	Anti-ext. Ring, Ø 15	3
25.	58605601	Intermed. Ring, Ø 13	3
	58605701	Intermed. Ring, Ø 15	3
26.	701023	O-ring, 26.7x1.78	3
28.	90260100	Seal, Ø 13, LP	3
	90260800	Seal, Ø 15, LP	3
	710030	Seal, Ø 15, LP (K276H, K312H)	3
29.	58210670	Support Ring, Ø 13	3
	58210770	Support Ring, Ø 15	3
30.	98210000	Plug, 3/8”x13	1
31.	96738000	Gasket, 17.5x23x1.5	1
32.	98217600	Plug, 1/2” BSPx10	1
33.	96751400	Gasket, Ø 21.5x27x1.5	1
34.	96698000	Washer, Ø 7.5x15x0.5	3
35.	58210582	Gasket, Ø 3x94	1
36.	58010022	Crankcase	1
37.	58210451	Drip Cover	1
38.	90156550	Oil Seal, Ø 15x24x5.7	3
39.	58050066	Piston Guide	3
40.	97734000	Piston Pin, Ø 10x29.5	3
41.	58030022	Connecting Rod	3
42.	90063500	Stop Ring Ø 25	1
43.	99183700	Screw M6x14	12
44.	53210851	Oil Level Indicator	1
46.	91833100	Premium bearing	1
47.	90389800	O-ring Ø 56.82x2.62	1
50.	98210500	Oil Dipstick	1
51.	90392550	O-ring, Ø 113.97x2.62	1
52.	58160022	Rear Cover	1
53.	98204100	Plug, 1/4”x9	1
54.	701013	O-ring, Ø 10.82x1.78	1
55.	98196600	Plug, 1/8”x8	1
56.	99303700	Screw, Hex Head	4
57.	96701600	Washer, Ø 8.4	4
58.	50200074	Pump Foot	2
59.	90385900	O-ring Ø 25.07x2.62	1
61.	58150122	Side Cover	1
60.	90067100	Stop Ring	1
72.	90063500	Circlip, Ø 25	1
73.	63027765	Crankshaft, 6.5 mm (EP1506G8, EP1306G8)	1
	63028065	Crankshaft, 8 mm (EP1508G8, EP1308G8)	1
	63028265	Crankshaft, 9 mm (EP1309G8, EP1509G8)	1
	63028465	Crankshaft,10 mm (EP1510G8, EP1310G8)	1
	63029265	Crankshaft, 11 mm (EP1311G8)	1
	63029065	Crankshaft, 13 mm (EP1313G8)	1
74.	99179000	Set Screw, M6x6	1
75.	91856800	Needle Bearing	1
76.	90409700	O-ring	1
77.	10051822	Flange	1
78.	90169000	Oil Seal, Ø 45x62x8	1
79.	99275500	Screw, Hex Head	4
80.	203476	Washer, Ø 8.4x15x1.5	4
81.	99191200	Screw, M6x30	4
82.	203510	Washer, Ø 6.4x10x.7	4

* 53150001 Oil Level Indicator Assembled W/O Screws and O-ring

REPAIR KITS

KIT NO.	K269	K270	K271	Ø 13		Ø 15			
				K272	K275	K273	K276	K276H[1]	K312H[1]
ITEM NO’S INCLUDED IN KIT	2, 3, 4, 5, 6, 13, 14, 15, 16, 17, (7), (18)	8, 9, 19, 20	38	22, 23, 24, 26, 28	22, 23, 24, 25, 26, 28, 29	22, 23, 24, 26, 28	22, 23, 24, 25, 26, 28 29	22, 23, 24, 25, 26, 28 29	23, 28
NUMBER OF ASSY’S IN KIT	6	6	3	3	1	3	1	3	3
NO. OF CYLINDERS KIT SERVICES	3	3	3	3	1	3	1	3	3

[1] Note: Seal tools included

TORQUE SPECS*

Position	Ft.-Lbs.	Nm.
9	96	130
10	4.5	6
20	44.3	60
21	14.8	20
30**	30	40
32	30	40
43	7.4	10
53	14.8	20
55**	9.6	13
56	14.8	20
81	7.4	10

*Decrease torque by 20% if threads are lubricated.
**Use Loctite 542 Red

DIMENSIONS

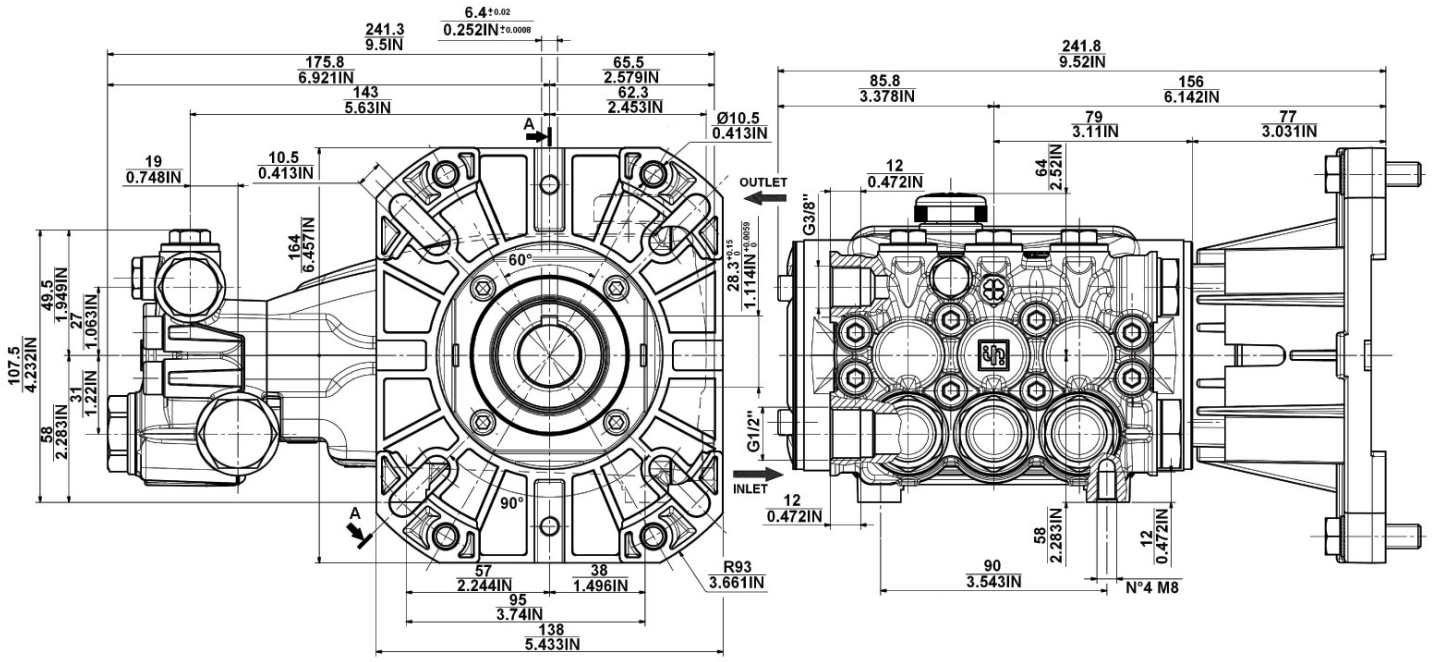

WARNING: High Pressure Systems require a primary pressure regulating device (i.e. regulator, unloader) and a secondary pressure relief device (i.e. pop-off valve, relief valve). Failure to install such relief devices properly could result in personal injury or damage to pump or property. GP does not assume any liability or responsibility for the operation of the user’s high pressure system.

WARNING: This product can expose you to chemicals including lead, which is know to the state of California to cause cancer and birth defects or other reproductive harm. For more information, go to www.P65Warnings.ca.gov