TRIPLEX

GENERAL PUMP *A member of the Interpump Group*

EP Series

Triplex Plunger Pump, Solid Shaft, 3400 RPM

FEATURES

- Triplex plunger pump
- New Forged brass manifold , increases working pressure to 4,000 PSI
- New plunger guide bushing (patent pending)
- Solid ceramic plungers with dual guide system
- New dual diameter plunger guide
- New optimized outlet valves
- New dual lip oil seal



SPECIFICATIONS

Pump Model	EP1505S34	EP1506S34	EP1508S34	EP1510S34	EP1306S34	EP1308S34	EP1310S34	EP1311S34	EP1313S34
Max Volume	2.1 GPM	2.9 GPM	3.4 GPM	2.4 / 4.2 GPM	2.1 GPM	2.6 GPM	3.2 GPM	3.4 GPM	2.4 / 4.0 GPM
Max Pressure	3,045 PSI				4,000				
Horsepower	4.4 HP	6.0 HP	7.1 HP	8.7 HP	5.7 HP	7.1 HP	8.6 HP	9.3 HP	10.7 HP
Max Pump Speed	3400 RPM			1750 / 3400 RPM	3400 RPM				1750 / 3400 RPM
Inlet Pressures	Flooded to 70 PSI								
Plunger Bore	.591 in/15 mm				.512 in./13 mm				
Plunger Stroke	.197 in./5 mm	.256 in./6.5 mm	.315 in./8 mm	.394 in./10 mm	.256 in./6.5 mm	.315 in./8 mm	.394 in./10 mm	.433 in./11 mm	.512 in./13 mm
Oil Capacity	15 oz.								
Max Fluid Tempe	165° F								
Inlet Port Thread	1/2”-14 BSP-F								
Discharge Port Thread	3/8”-19 BSP-F								
Shaft Diameter	.945 in./24 mm								
Weight	15.4 lbs.								
Dimensions	9.5”x8.38”x5.1”								

TRIPLEX

Instructions and Recommendations for the Installation of *EP Series Pumps*

Maximum temperature of the water through the pump is 165ºF (73ºC).

In order to obtain maximum performance in terms of duration of seals and valves, it is necessary to respect a few simple rules, as follows:

1) **In order to avoid damage caused by cavitation, the pump must be pressure fed.**

Note: Contact General Pump's technical sales department for guidance when operating the pump outside of the related inlet specs.

2) **The plumbing which feeds the pump must be of a diameter at least equal to the inlet port.** Also, follow the suggestions below:

   a) Make the plumbing as short and straight as possible, preferably in an upward direction to facilitate the expulsion of eventual air bubbles naturally if compatible with the requirements of the system.

   b) It is always useful to put a filter at the inlet with capacity of 4 to 5 times the flow of the pump, for example for a 4 gpm (15 l/min) pump, put a filter from 16 to 20 gpm (60-75 l/mi)The mesh size suitable for this application is 0.016" (.4 mm).

   c) It is extremely important to put a pressure switch on the suction port of the pump, and in any case downstream from the filter, so that it can stop the pump should the feed pressure drop by 20% due to the filter clogging or failure of the feed pump, etc.

3) **Change of oil**

   We recommend the ***first oil change after the first 50 hours***, with the ***pump stopped*** and the ***oil still warm***.

This change is not recommended because the oil has lost its properties, but rather to eliminate the impurities that have gotten into the oil during the running-in phase. If these impurities are not removed, but are allowed to remain in the oil, they *may cause premature wear* to the moving parts and the oil seals. **After this initial change, the oil can then be changed every three months or 300 hours of operation thereafter.**

Please note: If the pump works in conditions with high humidity and with sharp temperature changes, it is possible that condensation will appear inside the crankcase, which mixing with the oil can change its properties. This is easy to see because the oil changes to a white, milky color.

If the pump does not have excessive water leaking from the packings, and the oil becomes milky, the oil has to be changed more frequently. The percentage of water in the oil must not exceed 20%.

Use oil per the following chart:

CHART OF COMPATIBLE OILS	
General Pump	Series 100
BP	VISCO 2000
CASTROL	CWX
MOBIL	SUPER
SHELL	HELIX SUPER
TOTAL	QUARTZ 4000-5000

EP Series
Solid Shaft - 3400 RPM

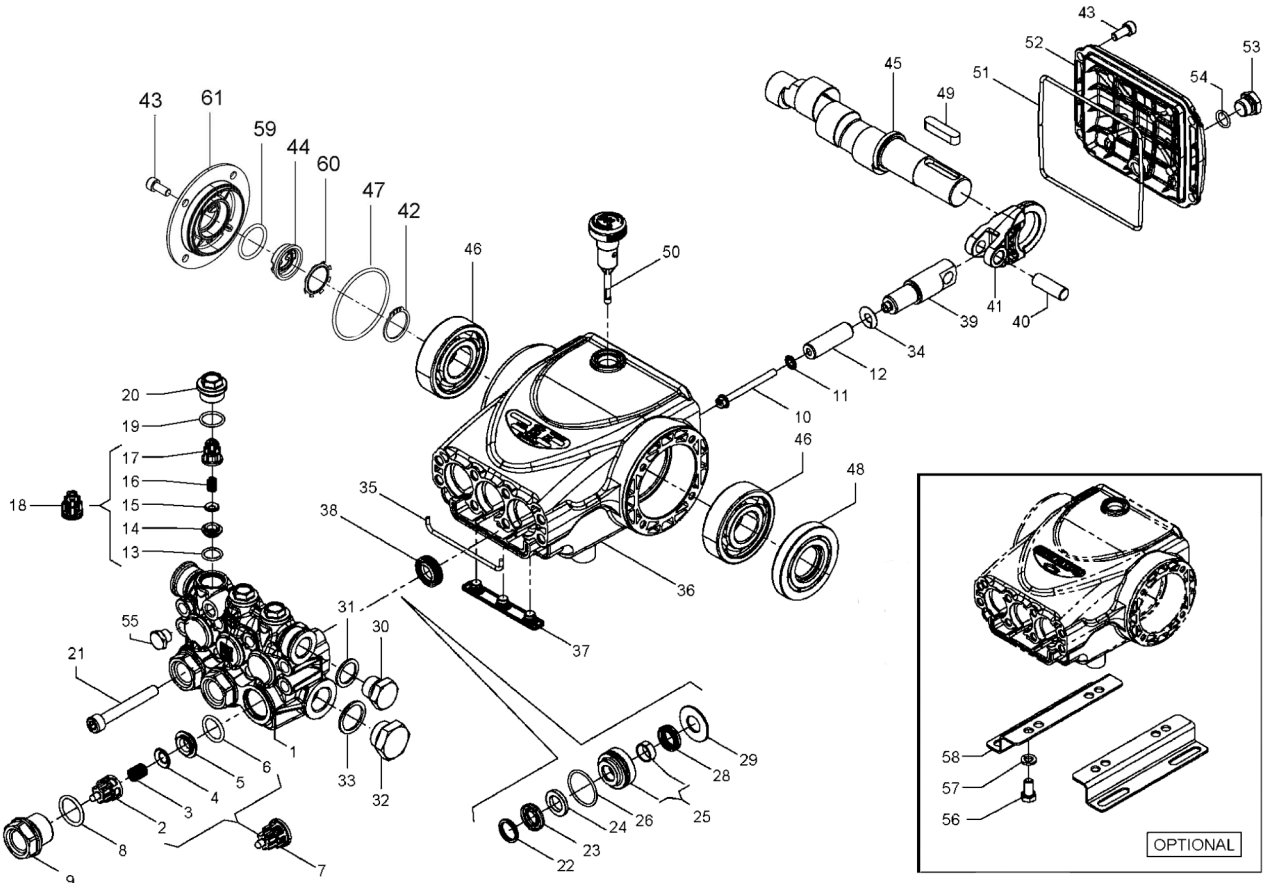

PARTS LIST

ITEM	PART NO.	DESCRIPTION	QTY
1.	58120041	Manifold, Ø 13	1
	58120141	Manifold, Ø 15	1
2.	36202551	Valve Cage	3
3.	94737600	Spring, Ø 9.4x14.8	3
4.	36200176	Poppet	3
5.	36200366	Valve Seat	3
6.	701115	O-ring, Ø17.13v2.62	3
7.	36711501	Valve Assembly	3
8.	701002	O-ring, Ø20.24x2.62	3
9.	98222600	Valve Cap, M24x1.5x16.7	3
10.	99169000	Plunger Bolt, M5x55	3
11.	96690500	Washer, Ø 5x11.5x0.4	3
12.	58040009	Plunger, Ø 13x42	3
	58040109	Plunger, Ø 15x42	3
13.	701014	O-ring, Ø 12.42x1.78	3
14.	36211366	Outlet Valve Seat	3
15.	36211276	Outlet Valve Poppet	3
16.	94733300	Spring, Ø 6.2x10.4	3
17.	36211151	Outlet Valve Cage Guide	3
18.	36719301	Complete Outlet Valve	3
19.	701016	O-ring, Ø 15.6x1.78	3
20.	98213700	Outlet Valve Cap, M18x1.5x10	3
21.	99317500	Screw, M8x60	8
22.	44100251	Head Ring, Ø 13	3
	63101051	Head Ring, Ø 15	3
23.	90260200	Packing, Ø 13, HP	3
	90261100	Packing, Ø 15, HP	3
	710031	Packing, Ø 15, HP (K276H, K312H)	3

ITEM	PART NO.	DESCRIPTION	QTY
24.	90507650	Anti-ext. Ring, Ø 13	3
	90508990	Anti-ext. Ring, Ø 15	3
25.	58605601	Intermed. Ring, Ø 13	3
	58605701	Intermed. Ring, Ø 15	3
26.	701023	O-ring, 26.7x1.78	3
28.	90260100	Seal, Ø 13, LP	3
	90260800	Seal, Ø 15, LP	3
	710030	Seal, Ø 15, LP (K276H, K312H)	3
29.	58210670	Support Ring, Ø 13	3
	58210770	Support Ring, Ø 15	3
30.	98210000	Plug, 3/8"x13	1
31.	96738000	Gasket, 17.5x23x1.5	1
32.	98217600	Plug, 1/2" BSPx10	1
33.	96751400	Gasket, Ø 21.5x27x1.5	1
34.	96698000	Washer, Ø 7.5x15x0.5	3
35.	58210582	Gasket, Ø 3x94	1
36.	58010022	Crankcase	1
37.	58210451	Drip Cover	1
38.	90156550	Oil Seal, Ø 15x24x5.7	3
39.	58050066	Piston Guide	3
40.	97734000	Piston Pin, Ø 10x29.5	3
41.	58030022	Connecting Rod	3
43.	99183700	Screw, M6x14	8
44.	53210851	Oil Level Indicator	1
45.	63020265	Crankshaft, 5mm (EP1505S34)	1
	63020565	Crankshaft, 6.5 mm (EP1306S34, EP1506S34)	1

ITEM	PART NO.	DESCRIPTION	QTY
	63020865	Crankshaft, 8mm (EP1308S34, EP1508S34)	
	63021265	Crankshaft, 10mm (EP1510S34, EP1310S34)	1
	63021865	Crankshaft, (EP1313S34)	1
	63029165	Crankshaft (EP1311S34)	1
46.	91833100	Bearing, Premium	2
47.	90389800	O-ring Ø 56.82x2.62	1
48.	90164100	Oil Seal, Ø 25x62x10	1
49.	91489200	Key	1
50.	98210500	Oil Dipstick	1
51.	90392550	O-ring, Ø 113.97x2.62	1
52.	58160022	Rear Cover	1
53.	98204100	Plug, 1/4"x9	1
54.	701013	O-ring, Ø 10.82x1.78	1
55.	98196600	Plug, 1/8"x8	1
56.	99303700	Screw, Hex Head	4
57.	96701600	Washer, Ø 8.4	4
58.	50200074	Pump Foot	2
59.	90385900	O-ring Ø 25.07x2.62	1
60.	90067100	Stop Ring	1
61.	58150122	Side Cover	1

* 53150001 Oil Level Indicator Assembled W/O Screws and O-ring

REPAIR KITS

KIT NO.	K269	K270	K271	Ø 13		Ø 15			
				K272	K275	K273	K276	K276H[1] (Hot Kit)	K312H[1] (Hot Kit)
ITEM NO'S INCLUDED IN KIT	2, 3, 4, 5, 6, 13, 14, 15, 16, 17, (7), (18)	8, 9, 19, 20	38	22, 23, 24, 26, 28	22, 23, 24, 25, 26, 28, 29	22, 23, 24, 26, 28	22, 23, 24, 25, 26, 28 29	22, 23, 24, 25, 26, 28 29	23, 28
NUMBER OF ASSY'S IN KIT	6	6	3	3	1	3	1	3	3
NO. OF CYLINDERS KIT SERVICES	3	3	3	3	1	3	1	3	3

[1] Note: Seal tools included

TORQUE SPECS*

Position	Ft.-Lbs.	Nm.
9	96	130
10	4.5	6
20	44.3	60
21	14.8	20
30**	30	40
32	30	40
43	7.4	10
53	14.8	20
55**	9.6	13
56	14.8	20

*Decrease torque by 20% if threads are lubricated.
**Use Loctite 542 Red

DIMENSIONS

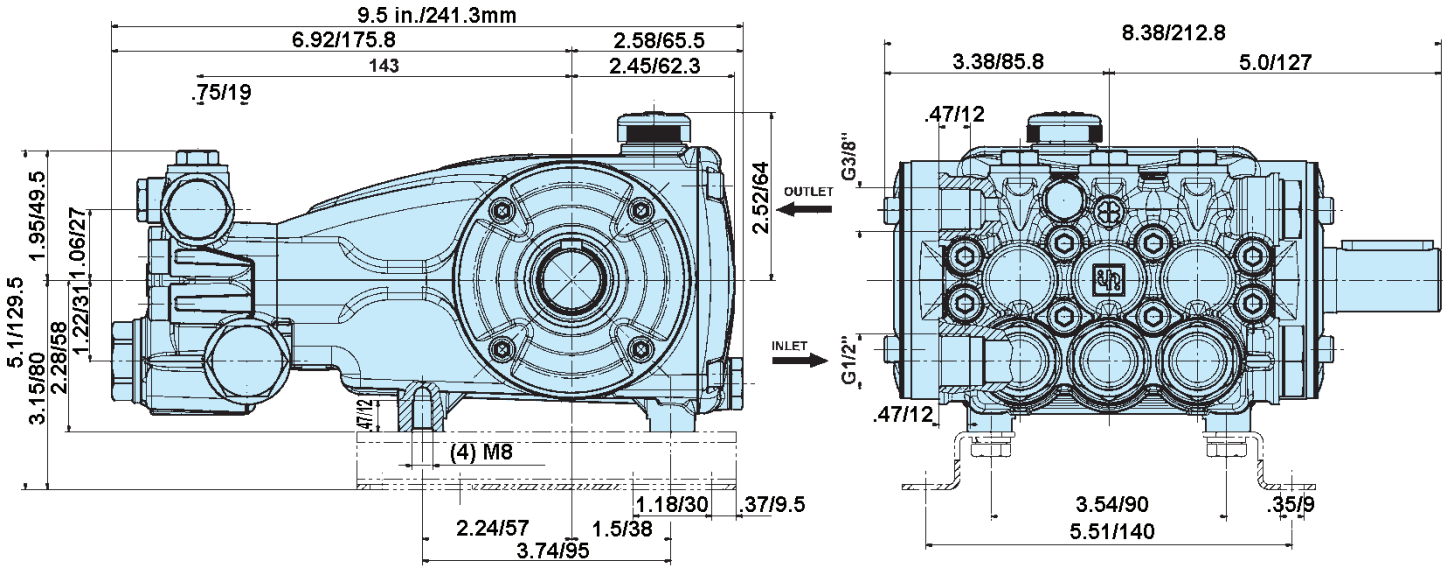

WARNING: High Pressure Systems require a primary pressure regulating device (i.e. regulator, unloader) and a secondary pressure relief device (i.e. pop-off valve, relief valve). Failure to install such relief devices properly could result in personal injury or damage to pump or property. GP does not assume any liability or responsibility for the operation of the user's high pressure system.

WARNING: This product can expose you to chemicals including lead, which is know to the state of California to cause cancer and birth defects or other reproductive harm. For more information, go to www.P65Warnings.ca.gov

GENERAL PUMP 1174 Northland Drive • Mendota Heights, MN 55120
Phone: 651.686.2199 • Fax: 800.535.1745 • e-mail: sales@gpcompanies.com • www.generalpump.com

Ref 300920 Rev. M
09-24

GENERAL PUMP