TRISTAR NPT - ANSI 150



FULL BORE



MADE IN ITALY

Atex CE Ex*

* on request

TRISTAR MANUAL NPT



art. 2831X5..	"L" AISI 316L F/F/F from 1/4" to 4"
art. 2851X5..	"T" AISI 316L F/F/F from 1/4" to 4"

TRISTAR FOR ACTUATOR NPT



art. V451X5..	"L" AISI 316L F/F/F from 1/4" to 4"
art. V450X5..	"T" AISI 316L F/F/F from 1/4" to 4"

TRISTAR MANUAL WITH FLANGES ANSI 150

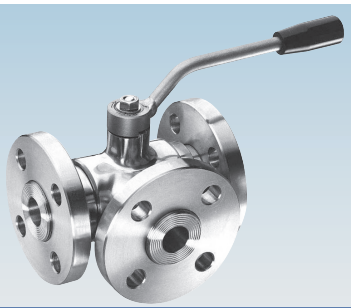

art. 2833XA..	"L" AISI 316L FL/FL/FL from 1/2" to 1/4" ANSI 150
art. 2832XA..	"T" AISI 316L FL/FL/FL from 1/2" to 1/4" ANSI 150

TRISTAR FOR ACTUATOR WITH FLANGES ANSI 150

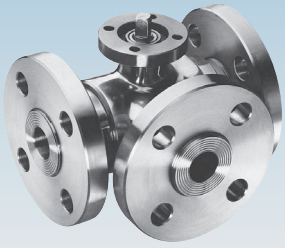

art. V453XA..	"L" AISI 316L FL/FL/FL from 1/2" to 1/4" ANSI 150
art. V452XA..	"T" AISI 316L FL/FL/FL from 1/2" to 1/4" ANSI 150

EFFEBI®

EFFEBI U.S. - 30 Chapin Rd, Suite 1205 - PINE BROOK, NJ 07058
Tel. +1 973-287-7584 - E-mail: effebi.us@effebi.com
Internet: www.effebi.com

ICIM UNI EN ISO 9001: 2015
ICIM ISO 14001:2015

TRISTAR
NPT-ANSI 150 4 SEALS

MAIN STANDARD FEATURES:
- **CONSTRUCTION:** AISI 316L.
- **PRESSURES:** 580 psi - 360 psi - 230 psi.
- **TEMPERATURE LIMITS:** -4°F / +320°F (PTFE).
- **CONNECTIONS:** F/F NPT ANSI B1.20.1
  FL/FL/FL flanged ANSI 150
- **SEATS:** 4 wrapping gaskets.
- **STEM SEAL:** triple patented stem-packing with labyrinth effect.
- **UPPER CONNECTION:** ISO 5211.
- **OPERATOR:** lever.
- **LEVER ROTATION:** 90° clockwise.

GENERAL APPLICATIONS:
ON-OFF valve for: deviation or mixing of fluids in chemical installations, food, sanitary and water plants. All parts have to be adequately degreased if the valves have to be used with oxygen. For special application please check the suitability of the valve for the process and the required corrosion resistancy using the relevant table.

SPECIAL EXECUTIONS:
- **PTFE+15% GLASS FIBER:** +347°F.
- **PTFE + CARBOGRAPHITE:** up to +383°F (optimum from 140°F to 383°F).
- Degreased valves for oxygen service.
- For further special requests please consult our technical/commercial service.

CONSTRUCTION

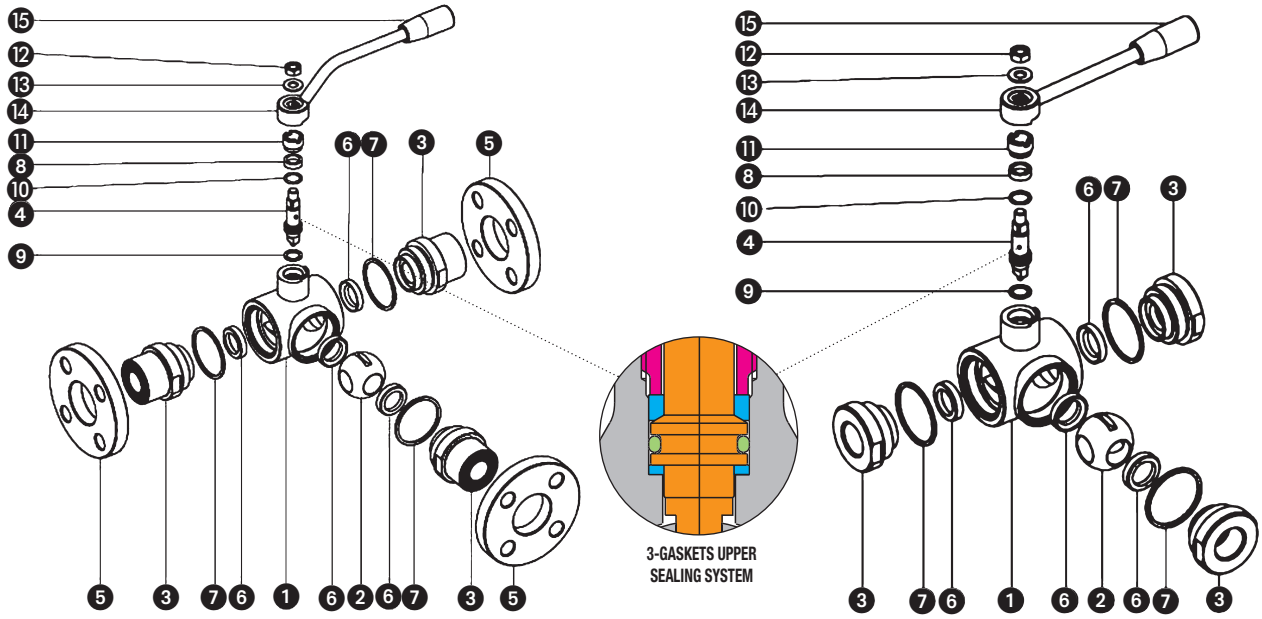

LIST OF COMPONENTS AND MATERIALS

1	BODY	AISI 316L	1
2	BALL	AISI 316L	1
3	BUSHING	AISI 316L	3
4	STEM	AISI 316L	1
5	FLANGES	AISI 316L	3
6	SEAT	PTFE	4
7	BUSHING SEATS	PTFE	3
8	PIN SEAT	PTFE	1
9	PIN SEAT	PTFE	1
10	PIN O-RING	FKM	1
11	REGULATION RING	AISI 304L	1
12	NUT	AISI 304L	1
13	WASHER	AISI 304L	1
14-15	LEVER	AISI 304L/DUROPLAST	1

TRISTAR
NPT-ANSI 150 4 SEALS

SECTION

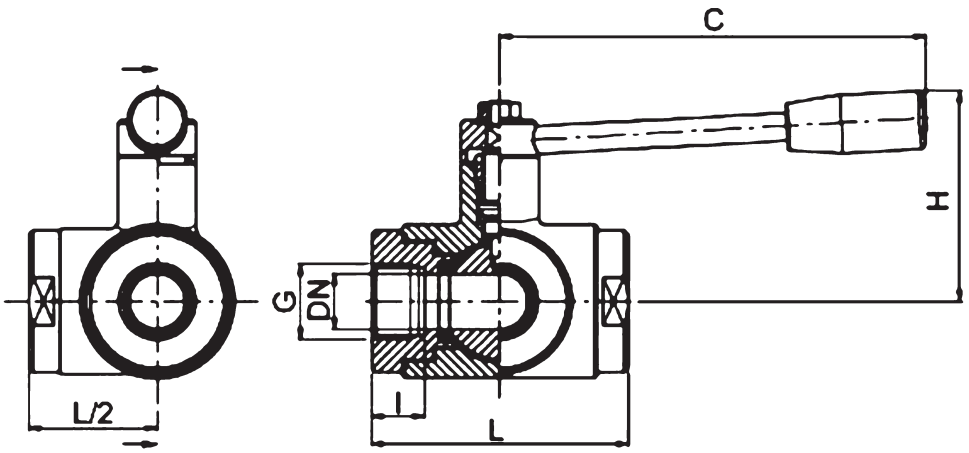

SIZE inch.	DN	L	l	C	H	Class (psi)	WEIGHT Lbf
1/4"	0.47	2.83	0.55	4.32	2.36	580	2.01
3/8"	0.47	2.83	0.63	4.32	2.36	580	1.98
1/2"	0.59	3.22	0.71	4.32	2.55	580	2.65
3/4"	0.79	3.61	0.75	6.28	2.75	580	4.14
1"	0.98	4.01	0.79	6.28	3.14	580	5.51
1"1/4	1.26	4.63	0.79	7.46	3.73	580	9.74
1"1/2	1.57	5.26	0.79	7.46	4.32	580	14.73
2"	1.96	5.65	0.79	8.64	4.71	362	17.61
2"1/2	2.55	6.28	1.02	11.19	5.11	362	21.69
3"	3.14	7.85	1.10	12.17	5.69	232	44.75
4"	3.93	9.42	1.26	12.17	6.28	232	72.20

SECTION

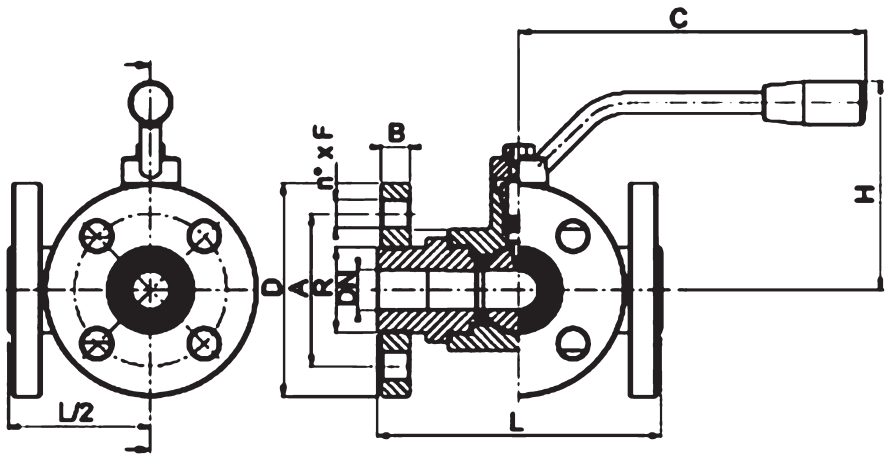

SIZE inch.	DN	L	C	H	D	B	R	A	n° x F	Class	WEIGHT Lbf
1/2"	0.59	5.11	5.11	3.53	3.49	0.37	1.37	2.38	4 x 0.63	ANSI150	7.12
3/4"	0.79	5.50	6.68	3.93	3.86	0.44	1.65	2.74	4 x 0.63	ANSI150	10.58
1"	0.98	5.89	6.68	4.32	4.24	0.50	2	3.12	4 x 0.63	ANSI150	13.62
1"1/4	1.26	7.07	9.42	5.11	4.61	0.56	2.47	3.49	4 x 0.63	ANSI150	23.26
1"1/2	1.57	7.85	9.42	5.50	4.99	0.62	2.95	3.86	4 x 0.63	ANSI150	30.25
2"	1.96	8.64	10.21	5.89	5.98	0.68	3.50	4.74	4 x 0.75	ANSI150	40.01
2"1/2	2.55	9.42	11.78	6.28	6.98	0.81	4.32	5.49	4 x 0.75	ANSI150	51.04
3"	3.14	10.21	12.96	6.87	7.48	0.87	4.71	5.98	4 x 0.75	ANSI150	73.79
4"	3.93	11.78	12.96	7.46	8.97	0.87	5.50	7.48	8 x 0.75	ANSI150	108.03

TRISTAR
NPT-ANSI 150 4 SEALS

EFFEBI

SECTION

Class psi

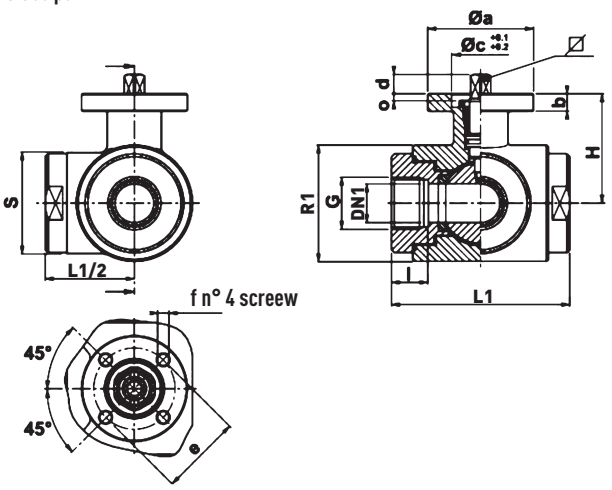

Class ANSI 150

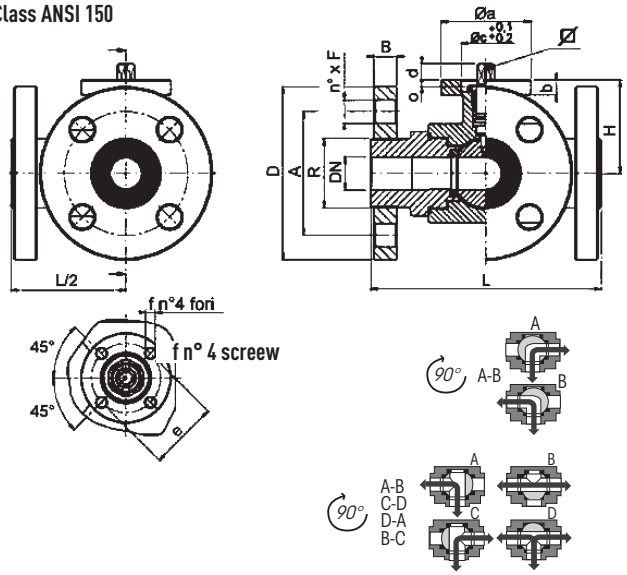

G	DN	DN1	L	L1	I	H	D	B	R	R1	A	S	n° x	ØF	ISO	Ø a	b	Ø c	o	☐	d	e	f	n° 4 screws	Weight Lbf Fl	Weight Lbf Fil
1/4"-3/8"	-	0.47	-	2.83	0.55	1.83	-	-	-	1.77	-	1.57	-	-	F03	1.81	0.35	0.98	0.12	0.35	0.31	1.41	0.24	M5X16	-	2.09
1/2"	0.59	0.59	5.11	3.22	0.71	1.92	3.49	0.37	1.37	2.04	2.38	1.65	4	0.63	F03	1.81	0.35	0.98	0.12	0.35	0.31	1.41	0.24	M6X16	7.12	2.49
3/4"	0.79	0.79	5.50	3.61	0.75	2.22	3.86	0.44	1.65	2.36	2.74	2.04	4	0.63	F05	2.55	0.35	1.37	0.12	0.55	0.51	1.96	0.27	M6X16	10.60	4.25
1"	0.98	0.98	5.89	4.01	0.79	2.40	4.24	0.50	2	2.75	3.12	2.36	4	0.63	F05	2.55	0.47	1.37	0.12	0.55	0.51	1.96	0.27	M6X16	14.66	5.84
1"1/4	1.26	1.26	7.07	4.63	0.79	3.20	4.61	0.56	2.47	3.34	3.49	2.95	4	0.63	F07	3.53	0.47	2.16	0.16	0.67	0.59	2.75	0.35	M8X20	23.41	10.91
1"1/2	1.57	1.57	7.85	5.26	0.79	3.50	4.99	0.62	2.95	3.93	3.86	3.53	4	0.63	F07	3.53	0.47	2.16	0.16	0.67	0.59	2.75	0.35	M8X20	30.86	15.04
2"	1.96	1.96	8.64	5.65	0.79	3.59	5.98	0.68	3.50	4.32	4.74	3.93	4	0.75	F07	3.53	0.47	2.16	0.16	0.67	0.59	2.75	0.35	M8X20	40.12	18.28
2"1/2	2.55	2.55	9.42	6.28	1.02	3.99	6.98	0.81	4.32	4.83	5.49	3.73	4	0.75	F07	3.53	0.47	2.16	0.16	0.67	0.59	2.75	0.35	M8X20	50.93	21.74
3"	3.14	3.14	10.21	7.85	1.10	4.56	7.48	0.87	4.71	6.28	5.98	4.52	4	0.75	F10	4.91	0.47	2.75	0.16	0.86	0.71	4.01	0.43	M10X25	74.07	45.64
4"	3.93	3.93	11.78	9.42	1.26	5.14	8.97	0.87	5.50	7.46	7.48	5.69	8	0.75	F10	4.91	0.47	2.75	0.16	0.86	0.71	4.01	0.43	M10X25	112.43	72.75

BREAKAWAY TORQUES in Lbf/in.

	DN size	10 1/4"	10 3/8"	15 1/2"	20 3/4"	25 1"	32 1"1/4	40 1"1/2	50 2"	65 2"1/2	80 3"	100 4"
psi	0	88.5	88.5	106.2	203.5	221.2	292.1	354	442.5	531	973.5	1150.5
	230	106.2	106.2	123.9	238.9	265.5	327.4	380.5	495.6	584.1	1150.5	1380.6
	ANSI150	106.2	106.2	123.9	238.9	265.5	327.4	380.5	495.6	584.1	1150.5	1380.6
	360	110.6	110.6	137.1	261.1	292.1	358.4	407.1	531	637.2		
	580	123.9	123.9	159.3	287.6	327.4	380.5	424.8				

The values in Lbf/Inch. may vary depending on the seat material, temperature and type of fluid. For reliable operation of various types of actuators, in different working conditions, is recommended a safety factor of 1.5 (for PTFE).

PRESSURE/TEMPERATURE DIAGRAM

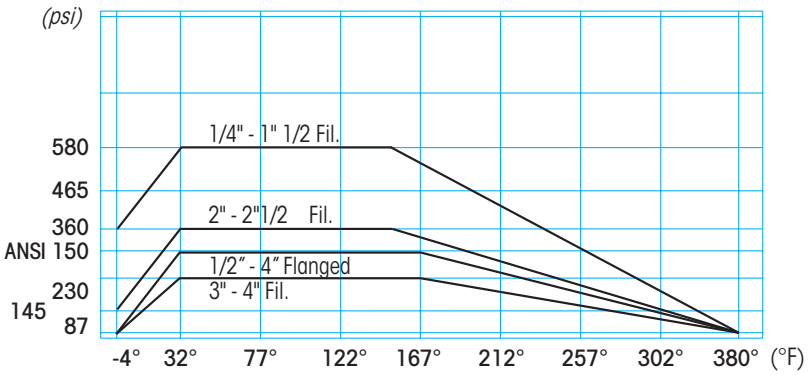

For Specifications about the Pressure-temperature Diagram and installation instructions