TRISTAR ANSI NPT WITH ELECTRIC ACTUATOR

F-F-F NPT



FL-FL-FL ANSI 150

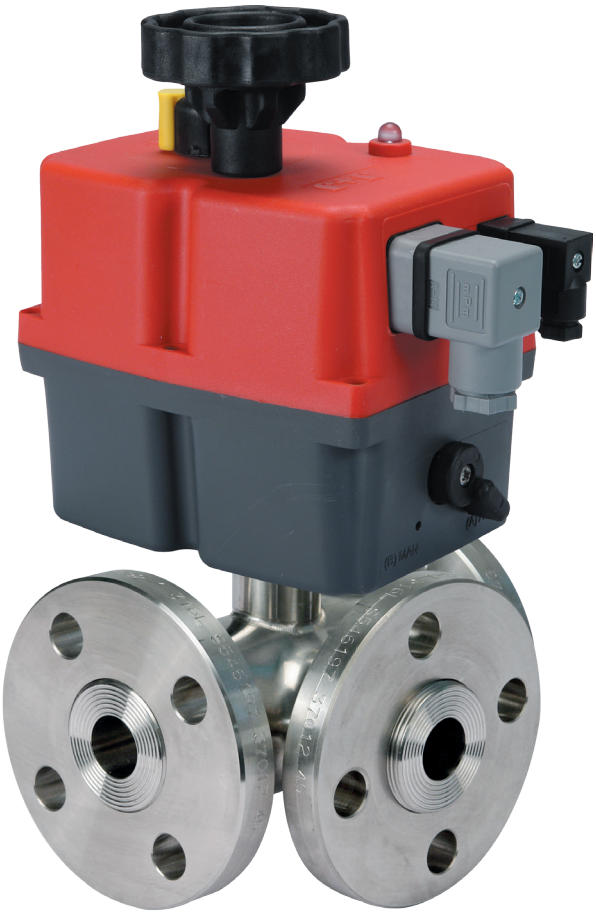

FULL BORE

E4C 24-240 V AC/DC F-F-F- NPT



art. E02BA...	L AISI 316L F/F/F from 1/4" to 4"
art. E01BA...	T AISI 316L F/F/F from 1/4" to 4"

E4C 24-240 V AC/DC FL-FL-FL ANSI 150



art. E04BA...	L AISI 316L FL/FL/FL from 1/2" to 4"
art. E03BA...	T AISI 316L FL/FL/FL from 1/2" to 4"

EFFEBI®

UNI EN ISO 9001: 2015

EFFEBI U.S. - 30 Chapin Rd, Suite 1205 - PINE BROOK, NJ 07058
Tel. +1 973-287-7584 - E-mail: effebi.us@effebi.com
Internet: www.effebi.com

ISO 14001:2015

TRISTAR ANSI NPT
WITH ELECTRIC ACTUATOR

E4C ACTUATOR FEATURES:
- **ROTATION ANGLE:** 90°.
- **TEMPERATURE LIMITS:** -4°F / +158°F.
- **SUPPLY VOLTAGE:** 24-240 VAC / DC 50 / 60 HZ.
- **PROTECTION DEGREE:** IP67.
- **STATIC TORQUE SUPPLIED:** 177 Lbf/inch. - 3097 Lbf/inch.
- **ROTATION TIME:** 10 s. - 48 s.
- **On Request is Available 12 V AC/DC 50 / 60 HZ**

MAIN STANDARD FEATURES:
- **CONSTRUCTION:** AISI 316L.
- **PRESSURES:** 580 psi - 360 psi - 230 psi.
- **TEMPERATURE LIMITS:** -4°F / +320°F (PTFE).
- **CONNECTIONS:** F/F/F NPT ANSI B1.20.1
  FL/FL/FL flanged ANSI 150
- **SEATS:** 4 wrapping gaskets.
- **STEM SEAL:** triple patented stem-packing with labyrinth effect.
- **UPPER CONNECTION:** ISO 5211.
- **OPERATOR:** lever.
- **LEVER ROTATION:** 90° clockwise.

STANDARD VALVE FEATURES:
For general features and special versions refer to data on the manual valve. For further information on the actuator technical features refer to the specific data sheet for actuator at the end of this catalogue.
E4C • ER-E EQ

TRISTAR F/F/F NPT + E4C ELECTRIC ACTUATOR

SIZE inch.	WEIGHT Lbf	A	B	C	E	ACTUATOR	KIT FOR ACTUATOR	CLASS psi
1/4"	6.4	7.13	4.33	6.65	8.48	E4C20	KATX0004	580
3/8"	6.4	7.13	4.33	6.65	8.48	E4C20	KATX0004	580
1/2"	7.2	7.13	4.33	6.65	8.58	E4C35	KATX0004	580
3/4"	9.8	7.13	4.33	7.72	9.94	E4C55	KATX0005	580
1"	11.2	7.13	4.33	7.72	10.12	E4C55	KATX0005	580
1" 1/4	15.4	7.13	4.33	7.72	10.93	E4C55	KATX0007	580
1" 1/2	21.7	7.13	4.33	7.72	11.22	E4C85	KATX0007	580
2"	24.6	7.13	4.33	7.72	11.32	E4C85	KATX0007	360
2" 1/2	33.6	9.25	8.43	8.43	12.42	E4C14	KATX0007	360
3"	56.6	9.25	8.43	8.43	12.99	E4C30	KATX0011	230
4"	84.1	9.25	8.43	8.43	13.58	E4C30	KATX0011	230

TRISTAR FL/FL/FL ANSI150 + E4C ELECTRIC ACTUATOR

SIZE inch.	WEIGHT Lbf	A	B	C	E	ACTUATOR	KIT FOR ACTUATOR	CLASS psi
1/2"	11.5	7.13	4.33	6.65	8.58	E4C20	KATX0004	ANSI 150
3/4"	16.3	7.13	4.33	7.72	9.94	E4C55	KATX0005	ANSI 150
1"	20.3	7.13	4.33	7.72	10.12	E4C55	KATX0005	ANSI 150
1" 1/4	29.1	7.13	4.33	7.72	10.93	E4C55	KATX0007	ANSI 150
1" 1/2	37.9	7.13	4.33	7.72	11.22	E4C85	KATX0007	ANSI 150
2"	48.2	7.13	4.33	7.72	11.32	E4C85	KATX0007	ANSI 150
2" 1/2	63.9	9.25	8.43	10.00	14.00	E4C14	KATX0007	ANSI 150
3"	85.9	9.25	8.43	10.00	14.57	E4C30	KATX0011	ANSI 150
4"	124.3	9.25	8.43	10.00	15.16	E4C30	KATX0011	ANSI 150

LIST OF COMPONENTS AND MATERIALS

57	BRACKET/VALVE SCREW	4	8.8 ZINC.
59	ACTUATOR **E4C**	1	POLYAMIDE

SECTION

F-F-F NPT

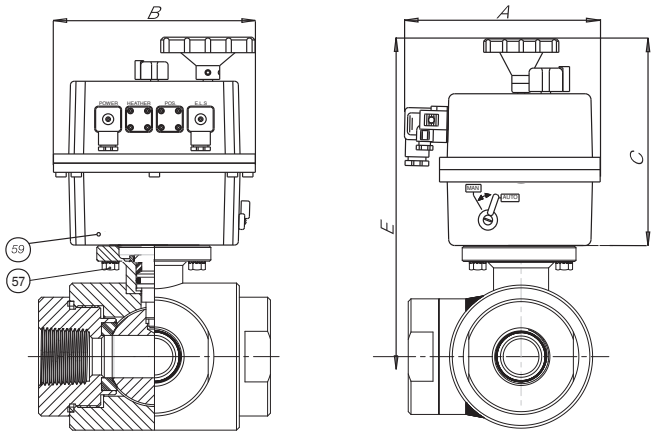

FL-FL-FL ANSI

