TITAN



See Pressure-temperature Diagram
2000 psi

HEAVY DUTY

Atex CE Ex II 2 G D*
* Available on request (up to 2")

PTFE



art. 2805X5...	F/F NPT 1/4" - 2"
art. 2810X	SW 1/4" - 2"
art. 2815X	BW 1/4" - 2"

PTFE + CARBOGRAPHITE



art. 2805D5...	F/F NPT 1/4" - 2"
art. 2810D	SW 1/4" - 2"
art. 2815D	BW 1/4" - 2"

MAIN STANDARD FEATURES:

- **CONSTRUCTION:** A351 CF8M (AISI 316).
- **CONNECTION:** F/F NPT ANSI B 1.20.1
  SW ANSI B16.11 socket weld
  BW ANSI B16.25 butt weld sch.40
- **PRESSURES:** 2000 psi 1/4" - 1"
  1500 psi 1"1/4 - 2".
- **TEMPERATURE LIMITS:** -4°F / +302°F (PTFE).
- **STEM:** Anti blow out with anti-static device.
- **OPERATOR:** lever with locking device.
- **MOUNTING PLATE:** ISO 5211 for actuator.

GENERAL APPLICATIONS:

ON-OFF valve for: chemical, water and pneumatic installations and for steam up to 145 psi. The valves are designed and manufactured in order to allow inspection and maintenance in line by removing the valve body only. For special applications please check the suitability of the valve for the process and the required corrosion resistancy using the relevant table.

SPECIAL EXECUTIONS:

- **SEALS:** PTFE + CARBOGRAPHITE up to +356°F
  (optimum from 140°F to 356°F).
- **Oval Handwheel up to 1".**
- For further special requests please consult our technical/commercial service.

EFFEBI®

UNI EN ISO 9001: 2015

EFFEBI U.S. - 30 Chapin Rd, Suite 1205 - PINE BROOK, NJ 07058
Tel. +1 973-287-7584 - E-mail: effebi.us@effebi.com
Internet: www.effebi.com

ISO 14001:2015

TITAN

CONSTRUCTION

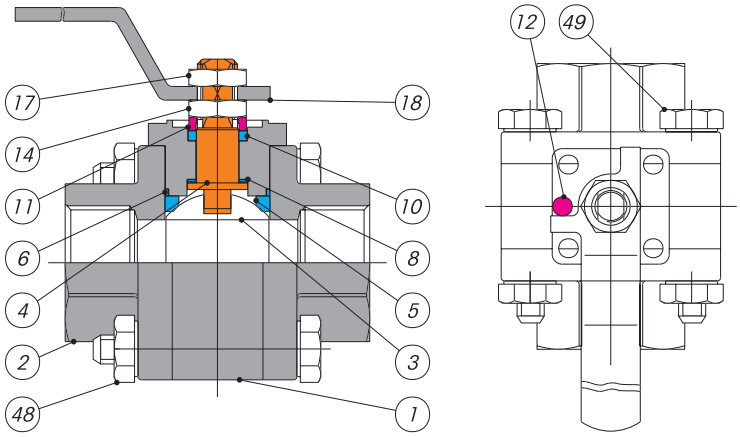

LIST OF COMPONENTS AND MATERIALS

1		BODY	A351-CF8M	1
2		FEMALE END	A351-CF8M	2
3		BALL	AISI 316	1
4		STEM	AISI 316	1
5		SEAT	PTFE	2
6		SIDE SEALING RING	PTFE	2
8		UPPER SEALING RING	PTFE	1
10		UPPER SEAL	PTFE	1
11		GLAND WASHER	AISI 316	1
12		STOP	AISI 304	1
14		STEM RETAINING NUT	AISI 304	1
17		LOCKING NUT	AISI 304	1
18		LEVER	AISI 304	1
48		SCREW	S.S.	4
49		NUT	S.S.	4

SECTION

While welding the SW and BW extension nipples, cool the valve body to avoid damaging the seals. The body temperature must NEVER exceed 248°F. Slags and impurities MUST NEVER penetrate inside the valve .

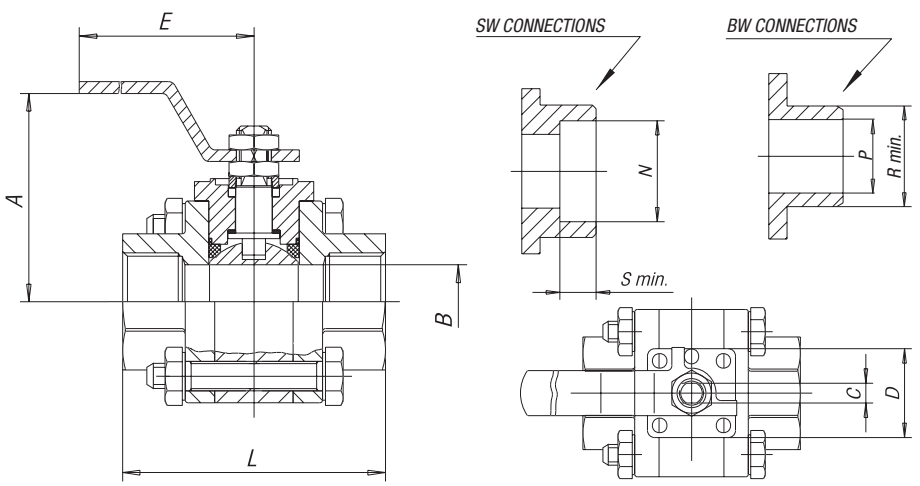

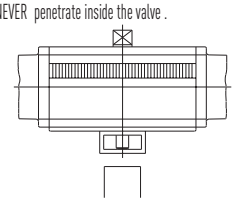

By removing the lever handle, the TITAN valve can be assembled directly to an actuator by means of a special K1Ga kit supplied upon request and by removing the operation stop (part. 12) of the valve.

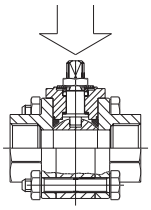

SIZE inch.	A	B	C	D	E	L	N	P	R min.	S	ISO 5211	WEIGHT Lbf FF	Cv
1/4"	2.47	0.43	0.18	1.41	4.91	2.36	0.56	0.36	0.71	0.44	F03	1.39	10.4
3/8"	2.47	0.51	0.18	1.41	4.91	2.36	0.69	0.49	0.71	0.44	F03	1.39	12.7
1/2"	2.79	0.59	0.20	1.41	4.99	2.95	0.86	0.62	0.88	0.44	F03	1.90	23.1
3/4"	2.95	0.79	0.20	1.41	4.99	3.14	1.07	0.82	1.10	0.56	F03	3.20	69.3
1"	3.22	0.98	0.31	1.65	5.89	3.53	1.33	1.04	1.35	0.72	F04	6.19	115.6
1"1/4	3.42	1.26	0.31	1.65	5.89	4.32	1.68	1.38	1.71	0.72	F04	8.40	150.2
1"1/2	3.77	1.49	0.37	1.96	7.46	4.71	1.92	1.61	1.94	0.75	F05	11.20	196.5
2"	4.12	1.96	0.37	1.96	7.46	5.50	2.40	2.06	2.42	0.84	F05	14.51	323.6

BREAKAWAY TORQUES in Lbf/in.

	DN size	10 1/4"	10 3/8"	15 1/2"	20 3/4"	25 1"	32 1"1/4	40 1"1/2	50 2"
psi	0	88.5	88.5	106.2	141.6	177	283.2	336.3	486.7
	928	132.7	132.7	177	212.4	238.9	460.2	619.5	867.3
	1500	159.3	159.3	203.5	221.2	256.6	708	796.5	1106.2
	2000	168.1	168.1	216.8	230.1	274.3			

The values in Lbf/in may vary depending on the seat material, temperature and type of fluid.
A safety factor of 1,5 should be used (for PTFE).

PRESSURE/TEMPERATURE DIAGRAM

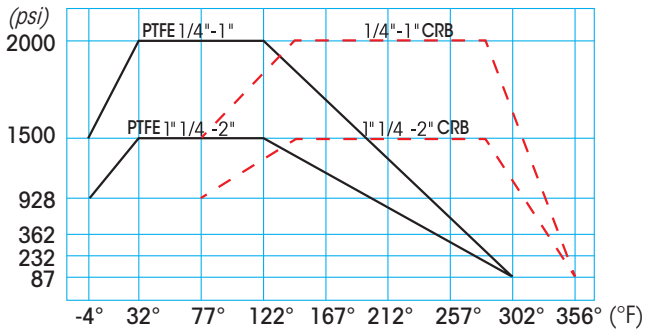

PTFE ——— PTFE+CRB – – – –

For Specifications about the Pressure-temperature Diagram and installation instructions