TITAN WITH ELECTRIC ACTUATOR

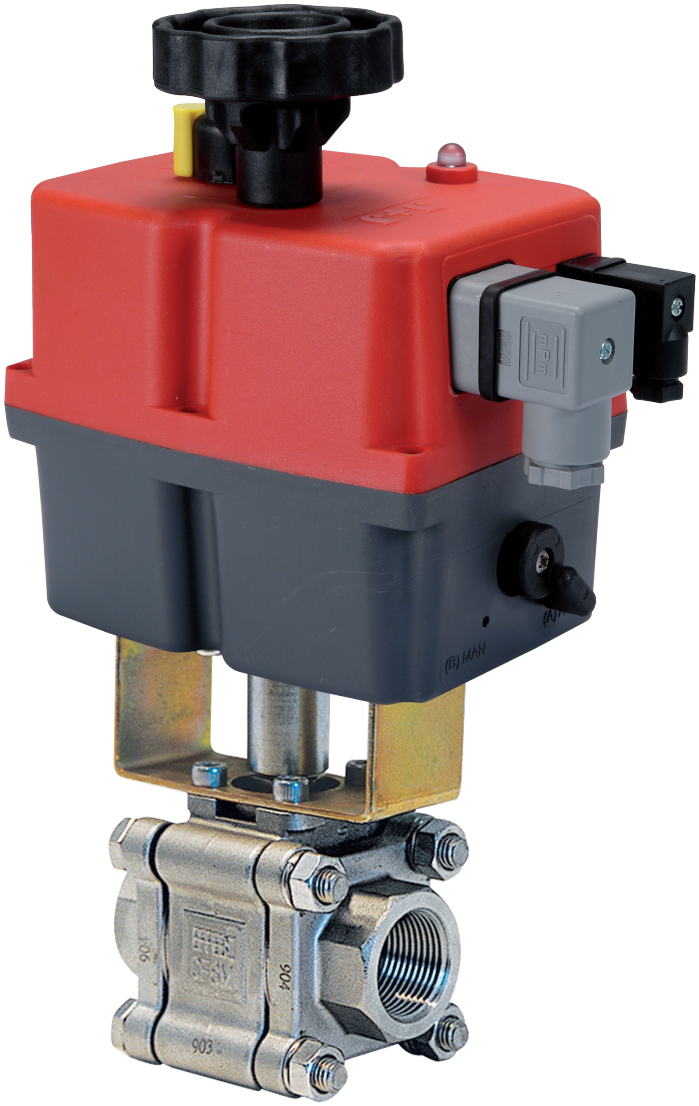

E4C 24-240 V AC/DC

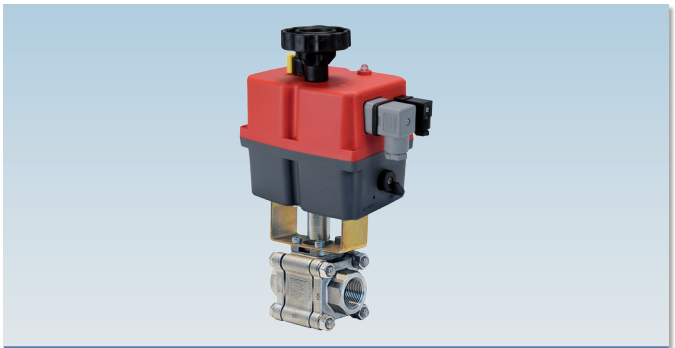

art. E61AA50...	F/F NPT from 1/4" to 2"
art. E61AA45...	SW from 1/4" to 2"
art. E61AA47...	BW from 1/4" to 2"

EFFEBI U.S. - 30 Chapin Rd, Suite 1205 - PINE BROOK, NJ 07058
Tel. +1 973-287-7584 - E-mail: effebi.us@effebi.com
Internet: www.effebi.com

UNI EN ISO 9001: 2015
ISO 14001:2015

TITAN
WITH ELECTRIC ACTUATOR

E4C ACTUATOR FEATURES:
- **ROTATION ANGLE:** 90°.
- **TEMPERATURE LIMITS:** -4°F / +158°F.
- **SUPPLY VOLTAGE:** 24-240 VAC - DC 50 / 60 HZ.
- **PROTECTION DEGREE:** IP67.
- **STATIC TORQUE SUPPLIED:** 177 Lbf/inch. - 3097 Lbf/inch.
- **ROTATION TIME:** 10 s. - 48 s.
- **On Request is Available 12 V AC-DC 50 / 60 HZ**

STANDARD VALVE FEATURES:
- **TEMPERATURE LIMITS:** -4°F / +302°F (PTFE)
  to be used use up to +356°F (PTFE + CRB).
- **MAXIMUM WORKING PRESSURE:** 1/4" - 1" 2000 psi
  1" 1/4 - 2" 1450 psi
- **CONNECTIONS:** F/F NPT ANSI B1.20.1
  SW ANSI B16.11 socket weld
  BW ANSI B16.25 butt weld sch40.

For general features and special versions refer to data on the manual valve. For further information on the actuator technical features refer to the specific data sheet for actuator at the end of this catalogue.
E4C • ER- E EQ

On request:
- EQ actuator is available for valves of all dimensions in Vac Vdc tension.

TITAN + E4C ELECTRIC ACTUATOR

SIZE inch.	WEIGHT Lbf	A	B	C	E	F	M	CH esag.	ACTUATOR E4C	KIT FOR ACTUATOR
1/4"	5.07	7.13	4.33	6.65	0.83	8.82	1.65	0.81	20	K1GA0002
3/8"	5.07	7.13	4.33	6.65	0.83	8.82	1.65	0.93	20	K1GA0002
1/2"	5.51	7.13	4.33	6.65	1.02	9.37	2.05	1.16	20	K1GA0304
3/4"	7.05	7.13	4.33	6.65	1.18	9.49	2.34	1.38	20	K1GA0305
1"	10.14	7.13	4.33	6.65	1.42	9.92	2.83	1.69	35	K1GA0406
1" 1/4	13.45	7.13	4.33	7.72	1.57	11.02	3.13	2.09	55	K1GA0407
1" 1/2	16.09	7.13	4.33	7.72	1.77	11.54	3.54	2.40	85	K1GA0408
2"	19.62	7.13	4.33	7.72	1.99	11.89	3.98	2.99	85	K1GA0408

SECTION

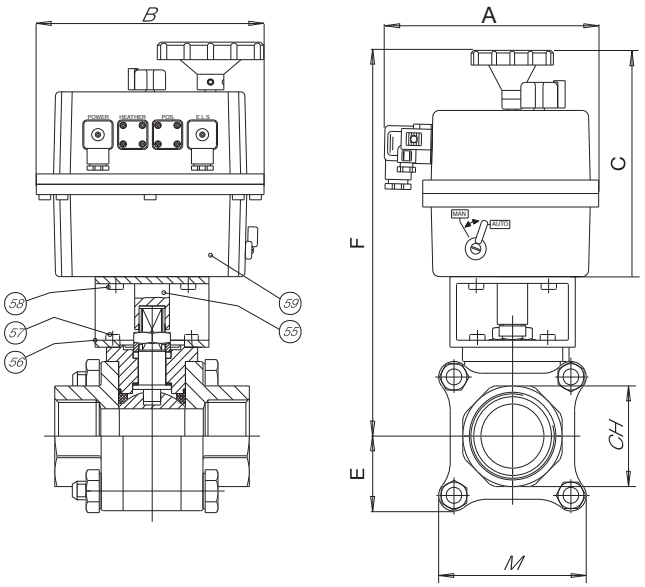

LIST OF COMPONENTS AND MATERIALS

55	ACTUATOR PIN	1	C.S. ZINC.
56	BRACKET	1	C.S. ZINC.
57	BRACKET/VALVE SCREW	4	8.8 ZINC.
58	BRACKET/ACTUATOR SCREW	4	8.8 ZINC.
59	ACTUATOR	1	POLYAMIDE