SUNNY WP

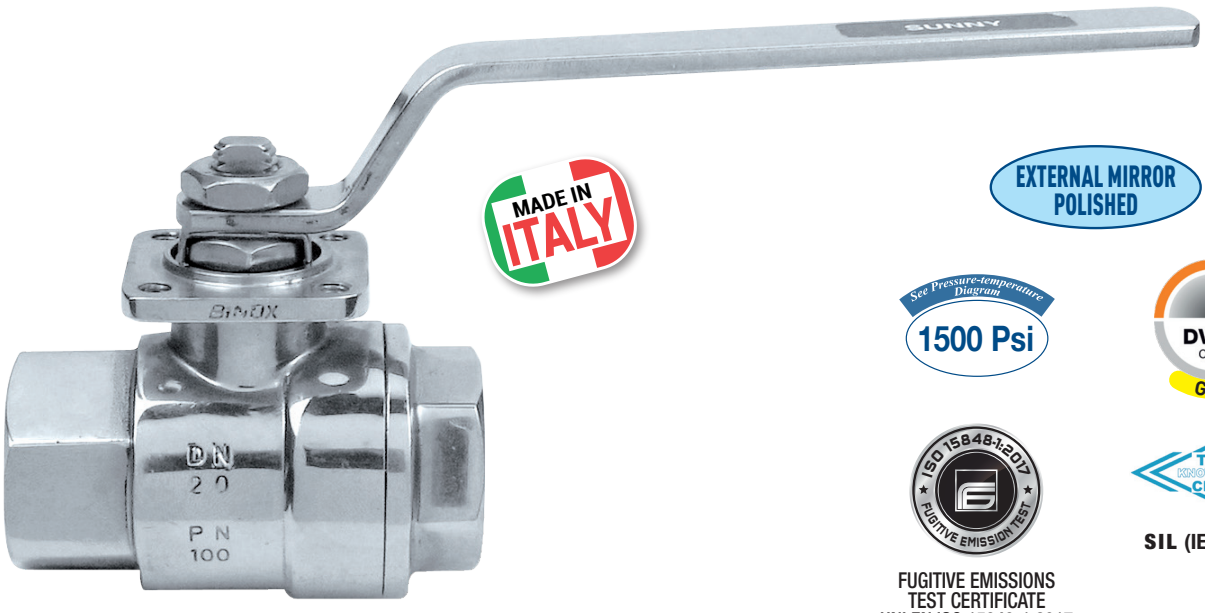

EXTERNAL MIRROR POLISHED

See Pressure-temperature Diagram
1500 Psi

DVGW CERT GAS

ISO 15848-1:2017 FUGITIVE EMISSION TEST

FUGITIVE EMISSIONS TEST CERTIFICATE UNI EN ISO 15848-1:2017

TÜV KNOW-HOW CLUB TÜV Hessen PROFI Member

SIL (IEC 61508)

Atex CE II 2 G D*

* Available on request (from 3/4" to 2")

art. 2561 F/F 3/8" - 2"

MAIN STANDARD FEATURES:
- **CONSTRUCTION:** A351 - CF8M (AISI 316).
- **CERTIFICATION:** DVGW for gas up to 2" (only PTFE) MOP5
  Fugitive Emission Test CertificateUNI EN ISO 15848-1:2017.
  up to 2" (only PTFE).
  Up to SIL3 IEC 61508
- **CONNECTIONS:** F/F NPT. ANSI B1.20.1
- **PRESSURES:** 1500 psi - 580 psi.
- **TEMPERATURE LIMITS:** -4°F / +302°F.
- **MOUNTING PLATE:** ISO 5211.
- **STEM:** Anti blow out 3/8" - 2".
- **UPPER SEAL:** TRIPLE stem-packing with labyrinth effect and automatic adjustment by Belleville washers.
- **OPERATOR:** lever. Available colours: black, yellow.

GENERAL APPLICATIONS:
ON-OFF valve for: chemical products, for water and pneumatic installations, gas, water, vacuum. For steam applications, working pressures may be reduced and special seals required.
The external mirror polished surface of the SUNNY WP (Ra 0,26 µm)is ideal for laboratories, food processing, pharmaceutical and all application where high level of hygiene is needed.
For special applications please check the suitability of the valve for the process and the required corrosion resistancy using the relevant table.

SPECIAL EXECUTIONS:
- **PTFE +15% GLASS FIBRE:** -4°F / +347°F.
- **PTFE+CARBOGRAPHITE:** -4°F /+356°F (best condition from 140°F to 356°F).
- **PE HD:** -4°F +158°F
- **Ball with relief hole**
- **DEGREASED VALVES:** For oxygen service (max W.P. 145 psi).
- **Locking device (open/close).**
- For further special requests please consult our technical/ commercial service.

EFFEBI®

UNI EN ISO 9001: 2015

EFFEBI U.S. - 30 Chapin Rd, Suite 1205 - PINE BROOK, NJ 07058
Tel. +1 973-287-7584 - E-mail: effebi.us@effebi.com
Internet: www.effebi.com

ISO 14001:2015

SUNNY WP

CONSTRUCTION

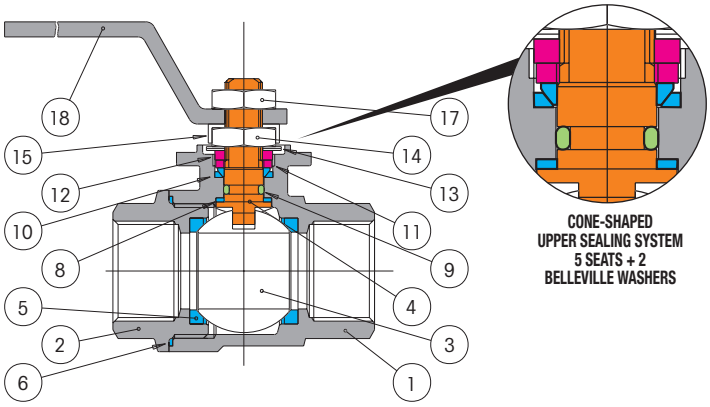

CONE-SHAPED
UPPER SEALING SYSTEM
5 SEATS + 2
BELLEVILLE WASHERS

LIST OF COMPONENTS AND MATERIALS

1		BODY	AISI 316	1.4408	1
2		FEMALE END	AISI 316	1.4408	1
3		BALL	AISI 316	1.4401	1
4		STEM	AISI 316	1.4401	1
5		SEAT	PTFE	-	2
6		SIDE SEALING RING	PTFE	-	1
8		UPPER SEALING RING	PTFE	-	2
9		STEM O-RING	VITON	-	1
10		UPPER SEALING COUPLE	PTFE	-	1
11		GLAND WASHER	AISI 304	1.4301	1
12		STOP	AISI 304	1.4301	1
13		BELLEVILLE WASHERS	AISI 301	1.4310	2
14		STEM RETAINING NUT	AISI 304	1.4301	1
15		FIXING NUT PLATE	AISI 304	1.4301	1
17		LOCKING NUT	AISI 304	1.4301	1
18		LEVER	AISI 304	1.4301	1

SECTION

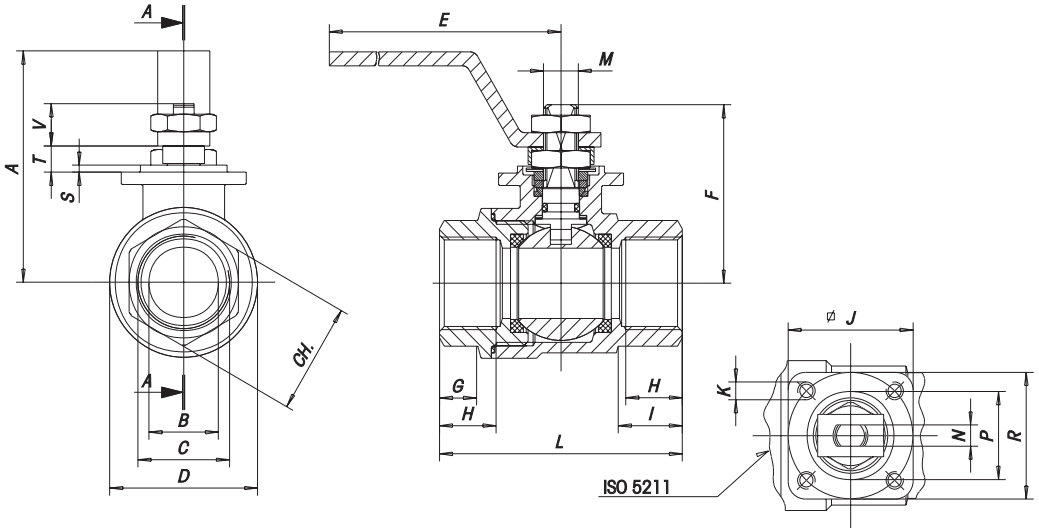

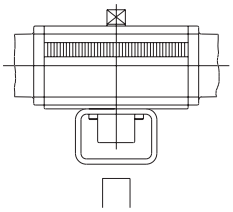

By removing the lever and the stop device, an actuator can be fitted using mounting kit K1GA...

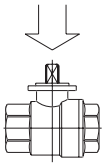

SIZE inch.	A	B	D	E	F	G	H	I	J	K	L	M	N	P	R	S	T	V	HEX.KEY	OCT. KEY	ATT. ISO	WEIGHT Lbf MF	WEIGHT Lbf FF	Cv
3/8"	2.04	0.39	1.14	4.32	1.45	0.33	0.45	0.53	1.41	M5	2.16	M8	4	0.98	1.41	0.08	0.24	0.37	0,84		F03	0.55	0.52	12.7
1/2"	2.16	0.59	1.34	4.32	1.65	0.39	0.59	0.71	1.41	M5	2.55	M8	4	0.98	1.41	0.08	0.24	0.37	1.04		F03	0.77	0.69	23.1
3/4"	2.59	0.79	1.67	5.50	2.04	0.45	0.64	0.71	1.41	M5	2.75	M10	6	0.98	1.41	0.08	0.29	0.47	1.24		F03	1.25	1.12	34.6
1"	2.75	0.98	1.98	5.50	2.20	0.55	0.75	1.08	1.41	M5	3.34	M10	6	0.98	1.41	0.08	0.29	0.47	1.59		F03	1.88	1.69	115.6
1" 1/4	3.34	1.26	2.47	7.07	2.67	0.61	0.84	1.12	1.65	M5	3.73	M12	8	1.18	1.65	0.12	0.37	0.53		1.94	F04	3.08	2.80	150.2
1" 1/2	3.57	1.57	2.96	7.07	2.91	0.73	0.84	0.90	1.65	M5	4.12	M12	8	1.18	1.65	0.12	0.37	0.53		2.14	F04	4.29	3.99	196.5
2"	4.12	1.96	3.57	9.03	3.42	0.88	1.01	1.37	1.96	M6	4.91	M16	10	1.37	1.96	0.12	0.44	0.70		2.73	F05	7.32	6.97	323.6

BREAKAWAY TORQUES in Lbf/in.

psi	DN size	10 3/8"	15 1/2"	20 3/4"	25 1"	32 1" 1/4	40 1" 1/2	50 2"
	0	14.1	28.3	31.8	40.7	101.7	168.1	243.3
	232	15.9	38.1	43.3	52.2	132.7	212.4	336.3
	600	22.1	45.1	53.1	61.1	147.8	253.1	371.7
	930	28.3	49.5	60.1	70.8	162.8	283.2	
	1500	33.6	57.5	75.2	88.5			

The values in Lbf/in may vary depending on the seat material, temperature and type of fluid.
A safety factor of 1,5 should be used (for PTFE).

PRESSURE/TEMPERATURE DIAGRAM

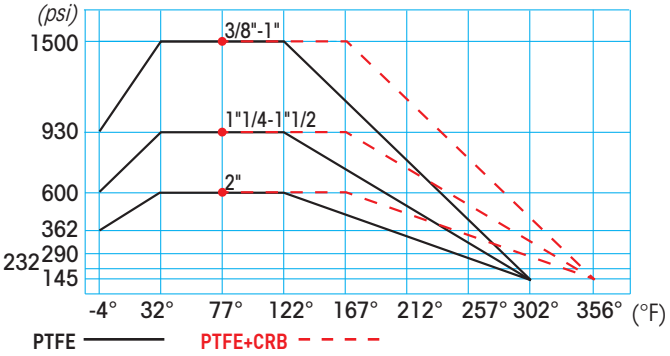

For Specifications about the Pressure-temperature Diagram and installation instructions