SUN DR WITH PNEUMATIC ACTUATOR



MADE IN ITALY

See Pressure-temperature Diagram
1500 Psi

Atex CE Ex*
* on request

DOUBLE ACTING



art. D33AA	F/F from 1/2" to 2"

SINGLE ACTING



art. S33AA	F/F from 1/2" to 2"

EFFEBI®

UNI EN ISO 9001: 2015

EFFEBI U.S. - 30 Chapin Rd, Suite 1205 - PINE BROOK, NJ 07058
Tel. +1 973-287-7584 - E-mail: effebi.us@effebi.com
Internet: www.effebi.com

ISO 14001:2015

SUN DR
WITH PNEUMATIC ACTUATOR

ACTUATOR FEATURES:
- **ROTATION ANGLE:** 90°.
- **TEMPERATURE LIMITS:** -4°F / +194°F.
- **MAXIMUM SUPPLY PRESSURE:** 145 Psi (116 Psi for DNA045).
- **NOMINAL PRESSURE:** 81.5 Psi.
- **SUPPLY FLUID:** filtered compressed air.
- **LUBRICATION:** NBR compatible oil to be used.
- Long regulation pin for the regulation from 0° up to 90° (on request)

For further information on the actuator technical features refer to the specific data sheet for actuator at the end of this catalogue.

STANDARD VALVE FEATURES:
- **TEMPERATURE LIMITS:** –4°F / +302°F (PTFE).
- **MAXIMUM WORKING PRESSURE:** Please refer to manual valve.
- **CONNECTIONS:**F/F NPT ANSI B1.20.1
- **MOUNTING PLATE:** ISO 5211.

For general applications and special executions, see the manual valve.

DOUBLE ACTING

SIZE inch.	WEIGHT Lbf	A	B	C	E	F	CH esag.	CH ottag.	L	M	ACTUATOR	KIT
1/2"	1.97	4.57	2.76	2.68	0.67	5.07	1.04	-	2.56	1.34	DNA045AX00	KANXOX02
3/4"	2.45	4.57	2.76	2.68	0.84	5.22	1.24	-	2.76	1.67	DNA045AX00	KANXOX02
1"	3.13	4.57	2.76	2.68	0.99	5.38	1.59	-	3.35	1.99	DNA045AX00	KANXOX02
1"1/4	5.14	5.24	3.07	2.91	1.24	5.97	-	1.95	3.74	2.09	DGA052AX00	KANXOX17
1"1/2	7.79	5.39	3.50	3.46	1.49	6.79	-	2.15	4.13	2.97	DGA063AX00	KANXOX17
2"	12.39	6.34	4.02	3.94	1.79	7.89		2.74	4.92	3.58	DGA075AX00	KANXOX08

SINGLE ACTING

SIZE inch.	WEIGHT Lbf	A	B	C	E	F	CH esag.	CH ottag.	L	M	ACTUATOR	KIT
1/2"	3.03	5.24	3.07	2.91	0.67	5.30	1.04	-	2.56	1.34	SGA0524X00	KANXBX02
3/4"	3.51	5.24	3.07	2.91	0.84	5.46	1.24	-	2.76	1.67	SGA0524X00	KANXBX02
1"	4.24	5.24	3.07	2.91	0.99	5.62	1.59		3.35	1.99	SGA0524X00	KANXBX02
1"1/4	6.83	5.39	3.50	3.46	1.24	6.52	-	1.95	3.74	2.09	SGA0634X00	KANXOX17
1"1/2	10.03	6.34	4.02	3.94	1.49	7.26	-	2.15	4.13	2.97	SGA0754X00	KANXOX18
2"	16.84	8.23	4.61	4.61	1.79	8.56	-	2.74	4.92	3.58	SGA0924X00	KANXBX08

SECTION

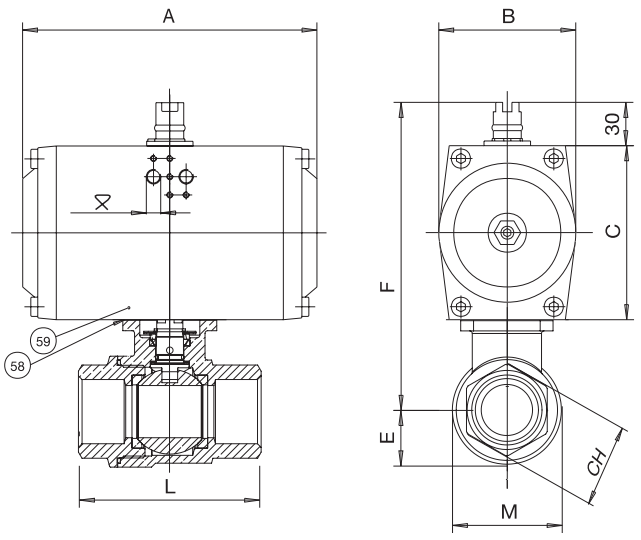

LIST OF COMPONENTS AND MATERIALS

58	BRACKET/ACTUATOR SCREW	4	8.8 ZINC.
59	ACTUATOR	1	AL. ANODIZED

⧖ Up to size 092= 1/8"G
110÷190=1/4"G