SUN DR

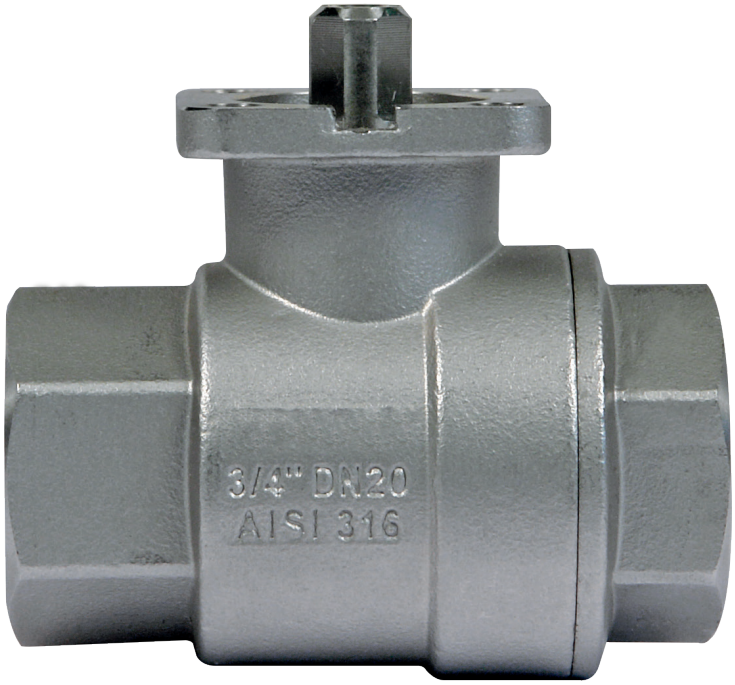

MADE IN ITALY

See Pressure-temperature Diagram
1500 Psi

DIRECT MOUNTING ISO 5211

Atex CE Ex II 2 G D*
* Available on request (from 3/4" to 2")

art. 2554 F/F 1/2" - 2"

MAIN STANDARD FEATURES:
- **CONSTRUCTION:** A351 - CF8M (AISI 316).
- **CONNECTIONS:** F/F NPT ANSI B1.20.1
- **PRESSURES:** 1500 psi- 580 psi.
- **TEMPERATURE LIMITS:** -4°F / +302°F.
- **STEM:** Anti blow out.
- **UPPER SEAL:** TRIPLE stem-packing with labyrinth effect and automatic adjustment by Belleville washers.
- **OPERATOR:** for actuator.
- **TESTED FOR VACUUM:** (11.6 psi).
- **MOUNTING PLATE:** ISO 5211.

GENERAL APPLICATIONS:
ON-OFF valve for: chemical products, for water and pneumatic installations, gas, water, vacuum. For steam applications, working pressures may be reduced and special seals required.
For special applications please check the suitability of the valve for the process and the required corrosion resistancy using the relevant table.

SPECIAL EXECUTIONS:
- **PTFE +15% GLASS FIBRE:** -4°F / + 347°F.
- **PTFE+CARBOGRAPHITE:** -4°F / + 356°F, (optimum from 140°F to 356°F).
- **PE HD:** -4°F / +158°F
- Ball with relief hole.
- **DEGREASED VALVES:** For oxygen service (max W.P. 145 Psi).
- For further special requests please consult our technical/ commercial service.

EFFEBI®

EFFEBI U.S. - 30 Chapin Rd, Suite 1205 - PINE BROOK, NJ 07058
Tel. +1 973-287-7584 - E-mail: effebi.us@effebi.com
Internet: www.effebi.com

ICIM UNI EN ISO 9001: 2015
ICIM ISO 14001:2015

SUN DR

CONSTRUCTION

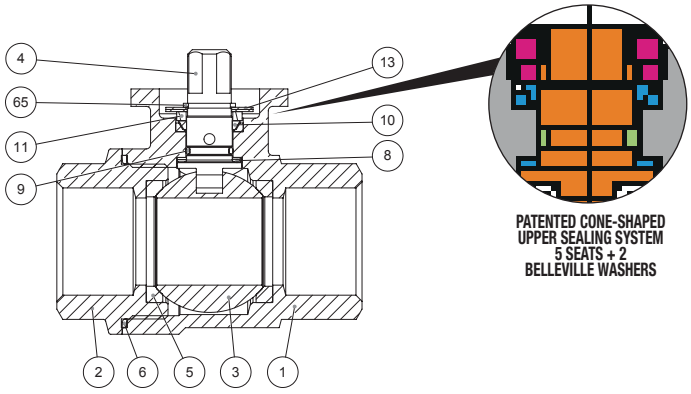

LIST OF COMPONENTS AND MATERIALS

1		BODY	AISI 316	1.4408	1
2		FEMALE END	AISI 316	1.4408	1
3		BALL	AISI 316	1.4401	1
4		STEM	AISI 316	1.4401	1
5		SEAT	PTFE	-	2
6		SIDE SEALING RING	PTFE	-	1
8		UPPER SEALING RING	PTFE	-	2
9		STEM O-RING	VITON	-	1
10		UPPER SEALING COUPLE	PTFE	-	1
11		GLAND WASHER	AISI 304	1.4301	1
12		STOP	AISI 304	1.4301	1
13		BELLEVILLE WASHERS	AISI 301	1.4310	2
14		STEM RETAINING NUT	AISI 304	1.4301	1
15		FIXING NUT PLATE	AISI 304	1.4301	1
17		LOCKING NUT	AISI 304	1.4301	1
18		LEVER	AISI 304	1.4301	1

SECTION

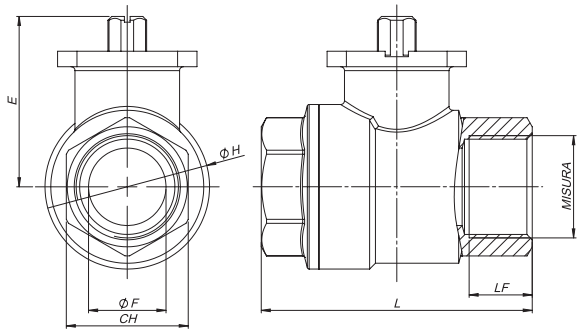

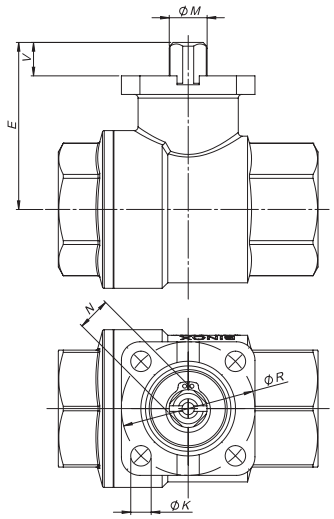

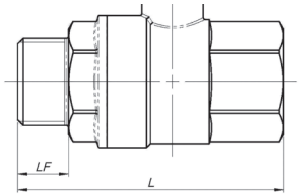

SIZE	E	ØF	ØH	L	LF	CH.ESA.	CH.OTT.	WEIGHT Lbf	CV
1/2"	1.57	0.59	1.34	2.55	0.59	1.04		0.72	23
3/4"	1.73	0.79	42.5	2.75	0.64	1.24		0.99	69
1"	1.89	0.98	1.99	3.34	0.75	1.59		1.58	115
1"1/4	2.32	1.26	2.48	3.74	0.84		1.95	2.57	150
1"1/2	2.57	1.57	2.97	4.13	0.84		2.14	3.83	196
2"	3.34	1.93	3.58	4.92	1.01		2.73	6.63	323

ISO 5211	M	N	R	K	E	V
F03	0.39	0.35	1.42	0.22	1.57	0.35
F03	0.39	0.35	1.42	0.22	1.73	0.35
F03	0.39	0.35	1.42	0.22	1.89	0.35
F04	0.47	0.43	1.65	0.22	2.32	0,43
F04	0.47	0.43	1.65	0.22	2.58	0,43
F05	0.62	0.55	2	0.25	3.34	0.55

L	LF	WEIGHT Lbf
2.93	0.59	0.83
3.30	0.64	1.32
4.01	0.76	2
4.41	0.85	3.32
4.76	0.85	4.55
5.59	1.02	7.72

BREAKAWAY TORQUES in Lbf/in.

	size	1/2"	3/4"	1"	1"1/4	1"1/2	2"
psi	0	15.9	31.8	40.7	101.7	168.1	243.4
	232	38.1	43.3	52.2	132.7	212.4	336.3
	580	45.1	53.1	61.1	147.8	253.1	371.7
	928	49.5	60.2	70.8	161.9	281.8	
	1500	57.5	74.9	88			

The values in Lbf/in may vary depending on the seat material, temperature and type of fluid.
A safety factor of 1,5 should be used (for PTFE).

PRESSURE/TEMPERATURE DIAGRAM

