SELENE ANSI WITH ELECTRIC ACTUATOR

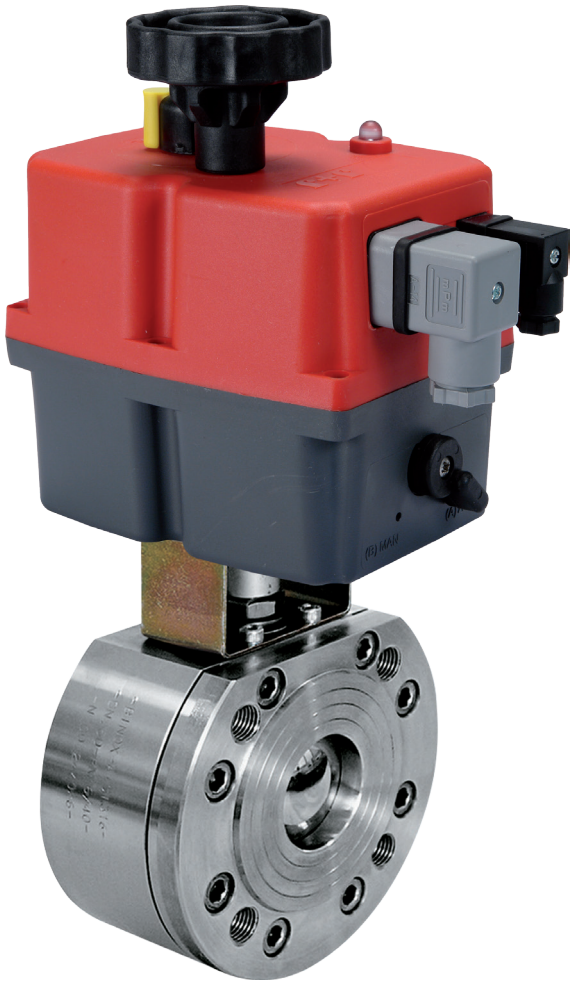

FUGITIVE EMISSIONS
TEST CERTIFICATE
UNI EN ISO 15848-1:2017
Only PTFE until ANSI 300

E4C 24-240 V AC/DC

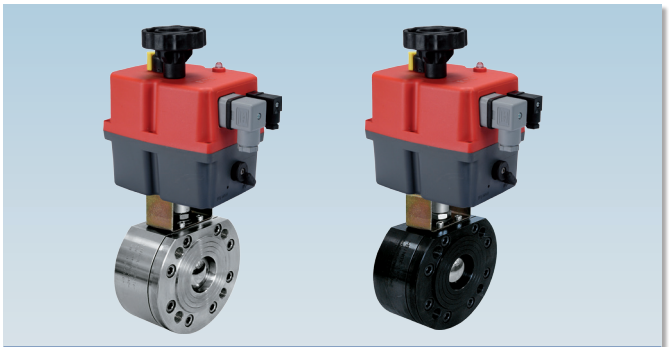

art. E9A...	AISI 316L 2" - 4" (FROM BAR) ANSI 150
art. E9C...	LF2 2" - 4" (FROM BAR) ANSI 150
art. E9D...	AISI 316L 2" - 4" (FROM BAR) ANSI 300
art. E9E...	LF2 2" - 4" (FROM BAR) ANSI 300
art. E9F...	AISI 316L 2" - 3" (FROM BAR) ANSI 600
art. E9G...	LF2 2" - 3" (FROM BAR) ANSI 600

EQ 24-115-230-400 V (on request)

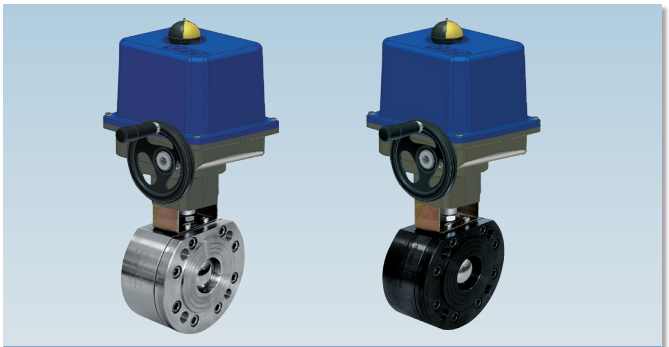

art. E9A...	AISI 316L 5" - 8" (FROM BAR OR CASTING) ANSI 150
art. E9C...	LF2 5" - 8" (FROM BAR OR CASTING) ANSI 150
art. E9D...	AISI 316L 5" - 8" (FROM BAR) ANSI 300
art. E9E...	LF2 5" - 8" (FROM BAR) ANSI 300
art. E9F...	AISI 316L 4" (FROM BAR) ANSI 600
art. E9G...	LF2 4" (FROM BAR) ANSI 600

EFFEBI®

UNI EN ISO 9001: 2015

EFFEBI U.S. - 30 Chapin Rd, Suite 1205 - PINE BROOK, NJ 07058
Tel. +1 973-287-7584 - E-mail: effebi.us@effebi.com
Internet: www.effebi.com

ISO 14001:2015

SELENE
ANSI WITH ELECTRIC ACTUATOR

E4C ACTUATOR FEATURES:
- **ROTATION ANGLE:** 90°.
- **TEMPERATURE LIMITS:** -4°F / +158°F.
- **SUPPLY VOLTAGE:** 24-240 VAC DC 50 / 60 HZ.
- **PROTECTION DEGREE:** IP67.
- **STATIC TORQUE SUPPLIED:** 177 Lbf/inch. - 3097 Lbf/inch.
- **ROTATION TIME:** 10 s. - 48 s.
- **On Request is Available 12 V AC-DC 50 / 60 HZ**

EQ ACTUATOR FEATURES:
- **ROTATION ANGLE:** 90°.
- **TEMPERATURE LIMITS:** -4°F / +176°F.
- **SUPPLY VOLTAGE:** 24-115-230-400 V
- **PROTECTION DEGREE:** IP67.
- **STATIC TORQUE SUPPLIED:** 4425 Lbf/inch. – 13275 Lbf/inch.
- **ROTATION TIME:** 29 sec. – 93 sec.

STANDARD VALVE FEATURES:
For general features and special versions refer to data on the manual valve. For further information on the actuator technical features refer to the specific data sheet for actuator at the end of this catalogue.
E4C • ER-E EQ

SELENE ANSI 150 + E4C ELECTRIC ACTUATOR

SIZE inch.	WEIGHT Lbf	A	B	C	E	ACTUATOR E4C	KIT FOR ACTUATOR
1/2"	30.6	7.11	4.32	7.70	13	20	K1GA0004
3/4"	46.3	7.11	4.32	7.70	13	20	K1GA0004
1"	62.8	9.23	8.40	9.97	16	20	K1GA1006
1" 1/4	88.6	9.23	8.40	9.97	17	20	K1GA0007
1" 1/2	174.1	12.68	11.27	15.94	24	35	K1GA1008
2"	239.2	12.68	11.27	15.94	26	55	K1GA0008
2" 1/2	450.8	13.67	10.80	16.06	28	85	K1GA0010

SELENE ANSI 300 + ELECTRIC ACTUATOR

SIZE inch.	WEIGHT Lbf	A	B	C	E	ACTUATOR	KIT FOR ACTUATOR
2"	34.1	7.11	4.32	7.70	12.88	E4C85	K1GAU009300
2" 1/2	49.6	7.11	4.32	7.70	13.57	E4C85	K1GAU010300
3"	62.8	9.23	8.40	9.97	16.24	E4C14	K1GAU011300
4"	88.6	9.23	8.40	9.97	17.55	E4C30	K1GAU012300
5"	174.1	12.68	11.27	15.94	24.23	EQ503	K1GAU013300
6"	239.2	12.68	11.27	15.94	25.56	EQ703	K1GAU014300
8"	450.8	13.67	10.80	16.06	27.63	EQ1503	K1GAU015300

SELENE ANSI 600 + ELECTRIC ACTUATOR

SIZE inch.	WEIGHT Lbf	A	B	C	E	ACTUATOR	KIT FOR ACTUATOR
2"	54.4	9.23	8.40	9.97	15.33	E4C14	K1GAU009600
2" 1/2	62.8	9.23	8.40	9.97	15.79	E4C30	K1GAU009600
3"	88.6	9.23	8.40	9.97	16.85	E4C30	K1GAU011600
4"	174.1	12.68	11.27	15.94	24.72	EQ503	K1GAU012600

On request: EQ actuator is available for valves of all dimensions in 24-115-230-400 voltage.

E4C ELECTRIC ACTUATOR

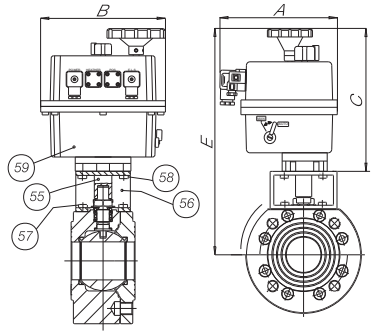

EQ ELECTRIC ACTUATOR

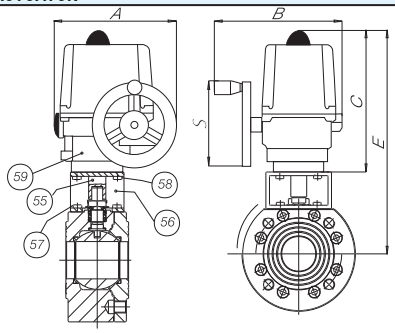

LIST OF COMPONENTS AND MATERIALS

55	ACTUATOR PIN	1	C.S. ZINC.
56	BRACKET	1	C.S. ZINC.
57	BRACKET/VALVE SCREW	4	8.8 ZINC.
58	BRACKET/ACTUATOR SCREW	4	8.8 ZINC.
59	ACTUATOR **E4C**	1	POLYAMIDE
59	ACTUATOR **EQ**	1	ALLUMINIUM