SELENE ANSI

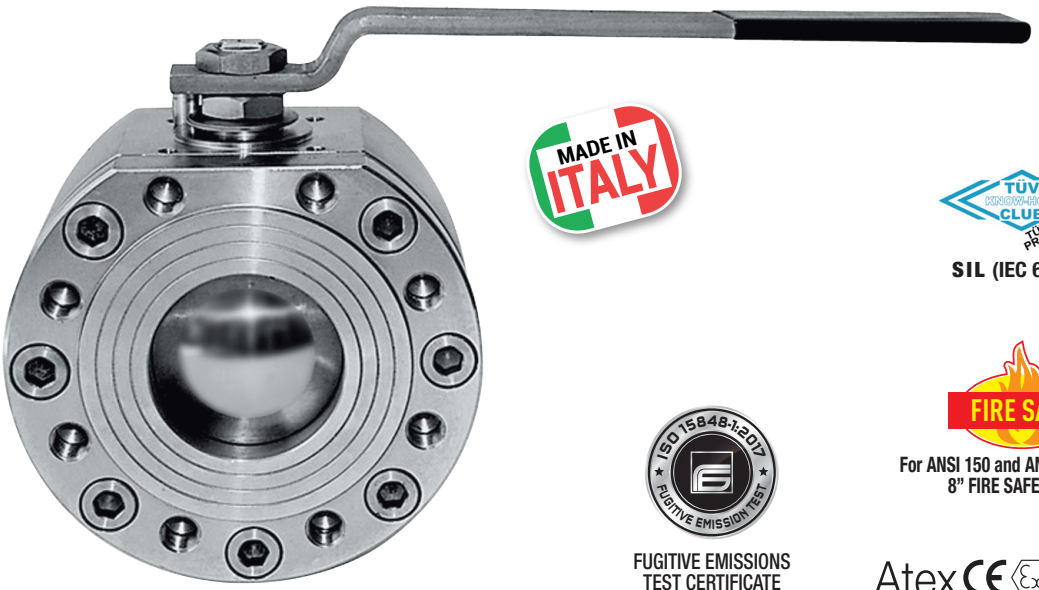

MADE IN ITALY

TÜV KNOW-HOW CLUB TÜV Hessen PROFI Member

SIL (IEC 61508)

ISO 15848-1:2017 FUGITIVE EMISSION TEST

FUGITIVE EMISSIONS
TEST CERTIFICATE
UNI EN ISO 15848-1:2017
Only PTFE until ANSI 300

FIRE SAFE

For ANSI 150 and ANSI 300 until 6"
8" FIRE SAFE DESIGN

Atex CE Ex II 2 G D*
* *on request*

art. RA0A **AISI 316L FROM BAR ****

ANSI 150

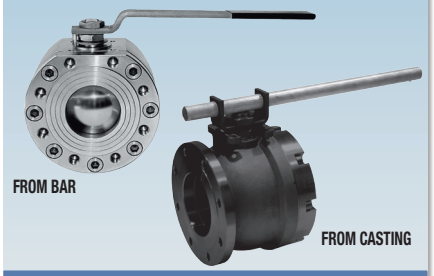

art. RA0A....	**AISI 316L FROM BAR **** from 2" to 8"
art. RA0A....F	**AISI 316 FROM CASTING (CF8M)** from 5" to 8"
art. RF0A	**LF2 FROM BAR** from 2" to 8"
art. RF0A....F	**ASTM A352 LCB FROM CASTING** from 5" to 8"

ANSI 300

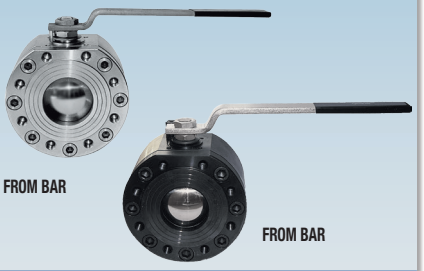

art. RA0B	**AISI 316L FROM BAR **** from 2" to 8"
art. RF0B	**LF2 FROM BAR** from 2" to 8"

ANSI 600

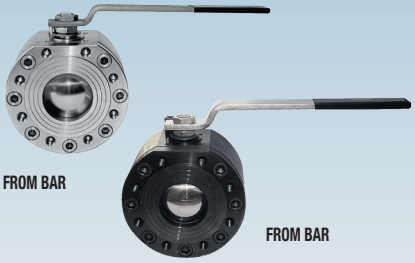

art. RA0D	**AISI 316L FROM BAR **** from 2" to 4"
art. RF0D	**LF2 FROM BAR** from 2" to 4"

MAIN STANDARD FEATURES:

- **CONSTRUCTION:** AISI 316L (body from bar) **
  A351 (CF8M) AISI 316 (body from casting)
  LF2 (body from bar)
  LF2 (body from casting)
- **STANDARDS:** BS EN ISO 17292:2004.
- **CERTIFICATION:** FIRE SAFE according to BS 6755 - API 6 FA - API 607 for ANSI 150 and ANSI 300 until DN150
  Fugitive Emission UNI ENISO 15848-1:2017 (only PTFE until ANSI 300).
  Up to SIL3 IEC61508
- **PRESSURES:** ANSI 150 - ANSI 300 - ANSI 600 body from bar
  ANSI 150 body from casting (from DN125 to DN200).
- **TEMPERATURE LIMITS:** -4°F / +356°F (PTFE).
- **CONNECTIONS with flanges:** ANSI 150 RF - ANSI 300 RF - ANSI 600 RF (ANSI B16.5)
- **FLANGE DRILLING:** metric.
- **STEM:** Anti blow out with anti-static device.
- **SEAL:** triple patented stem-packing with labyrinth effect and automatic adjustment by Belleville washers.
- **UPPER CONNECTION:** ISO 5211.
- **OPERATOR:** lever. Available colours: black, yellow.
- **FLANGE:** Bolted flange for ball retaining.
- **CONTAINED BALL.**

EFFEBI®

EFFEBI U.S. - 30 Chapin Rd, Suite 1205 - PINE BROOK, NJ 07058
Tel. +1 973-287-7584 - E-mail: effebi.us@effebi.com
Internet: www.effebi.com

ICIM UNI EN ISO 9001: 2015
ICIM ISO 14001:2015

SELENE
ANSI

GENERAL APPLICATIONS:
ON-OFF valve for: chemical products, food plants, distribution lines for gas, air, water. Suitable for Vacuum (not high vacuum), steam up to +392°F with PTFE+CARBOGRAPHITE.

SPECIAL EXECUTIONS:
- **PTFE+15% GLASS FIBER:** + 374°F.
- **PTFE+CARBOGRAPHITE:** + 392°F (optimum from 140°F to 392°F).
- **Peek for high temperatures** up to +482°F (optimum from 212°F to 482°F).
- **HDPE:** -4°F / + 158°F
- Ball with relief hole
- PTFE seals with metal core (on request).
- Integral seal in PTFE up to 4" (only valve from bar, max. 232 Psi)
- Reduction gears with manual operator.
- Stem extensions 2 inch. and 4 inch. up to 4".
- Connection, type PN and ANSI
- Body - flange – stem – ball made of AISI 316L.
- Degreased valve for oxygen service (max 290 Psi) (until AISI 316L).
- Valves in Aisi304
- For further special requests please consult our technical/ commercial service.

CONSTRUCTION

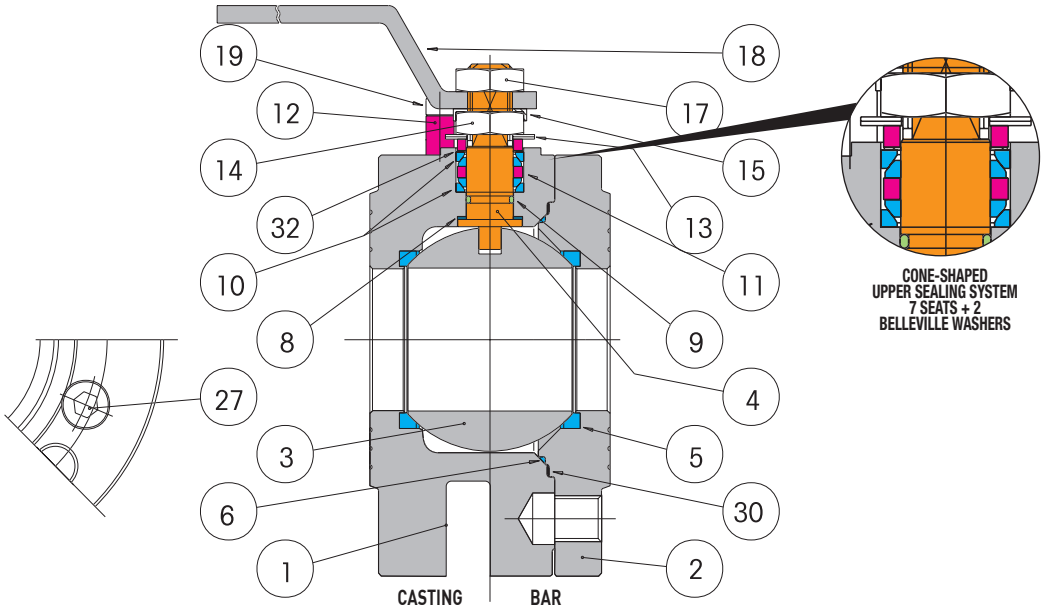

LIST OF COMPONENTS AND MATERIALS

			ASTM A350 LF2 Bar	ASTM A352 LCB Casting	AISI 316 Casting	AISI 316L ** Bar	N°
1		BODY	ASTM A350 LF2	ASTM A352 LCB	AISI 316	AISI 316L	1
2		FLANGE	ASTM A350 LF2	ASTM A350 LF2	AISI 316	AISI 316	1
3		BALL	AISI 304	AISI 304	AISI 316	AISI 316	1
4		STEM	AISI 304	AISI 304	AISI 316	AISI 316	1
5		SEAT	PTFE/PTFE + METAL CORE	PTFE/PTFE + METAL CORE	PTFE/PTFE + METAL CORE	PTFE/PTFE + METAL CORE	2
6		SIDE SEALING RING	PTFE	PTFE	PTFE	PTFE	1
8		UPPER SEALING RING	PTFE	PTFE	PTFE	PTFE	2
9		STEM O-RING	VITON	VITON	VITON	VITON	1
10		UPPER SEALING COUPLE	PTFE	PTFE	PTFE	PTFE	2
11		GLAND WASHER	AISI 304	AISI 304	AISI 304	AISI 304	2
12		STOP	C.S.	C.S.	AISI 304	AISI 304	1
13		BELLEVILLE WASHERS	50CrV4	50CrV4	AISI 301	AISI 301	2
14		STEM RETAINING NUT	C.S.	C.S.	AISI 304	AISI 304	1
15		FIXING NUT PLATE	AISI 304	AISI 304	AISI 304	AISI 304	1
17		LOCKING NUT	C.S.	C.S.	AISI 304	AISI 304	1
18		LEVER	C.S.	C.S.	AISI 304	AISI 304	1
19		STOP SCREW	C.S.	C.S.	AISI 304	AISI 304	1
27		FLANGE LOCKING SCREW	C.S.	C.S.	AISI 304	AISI 304	1
30		EXTERNAL SIDE SEALING RING	PURE GRAPHITE	PURE GRAPHITE	PURE GRAPHITE	PURE GRAPHITE	1
32		UPPER RING	PTFE	PTFE	PTFE	PTFE	1

SELENE
ANSI

EFFEBI

SECTION

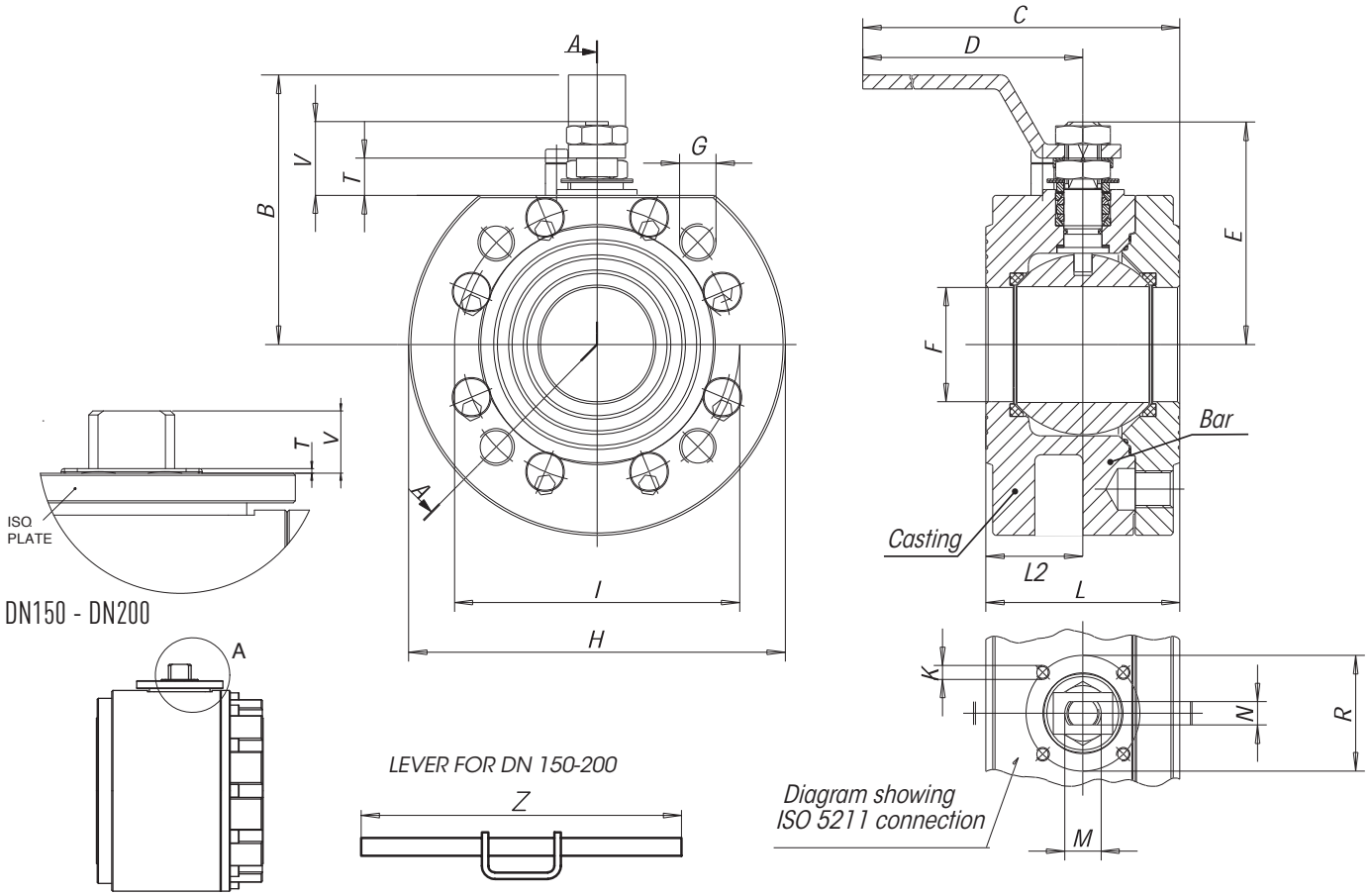

SIZE inch.		B	C	D	E	F	G	H	K	I	L	M	N	R	T ± 1	V ± 0,5	Z	FM	N° G	ATT. ISO	WEIGHT Lbf
ANSI 150	2"	4.59	10.72	9.03	3.71	1.94	M16	6.48	M6	4.75	3.35	M16	0.39	1.96	0.63	1.18	-	M16	4	F05	24.2
	2" 1/2	5.46	15.12	13.08	4.81	2.55	M16	7.26	M8	5.48	4.06	M22	0.55	2.75	0.75	1.67	-	M16	4	F07	38.5
	3"	5.85	15.47	13.08	5.20	3.06	M16	7.38	M8	5.99	4.80	M22	0.55	2.75	0.75	1.67	-	M16	4	F07	47
	4"	6.56	17.59	14.53	5.83	3.77	M16	8.64	M10	7.48	6.06	M27	0.63	4.01	0.84	1.87	-	M16	8	F10	86.1
	5"	7.11	18.18	14.53	6.54	4.63	M20	10.01	M10	8.48	7.28	M27	0.63	4.01	0.81	1.83	-	M20	8	F10	121.7
	6"	5.85	27.06	22.93	7.85	5.65	M20	11.58	M12	9.48	9.25	M42	1.02	4.91	0.10	1.39	25.53	M20	8	F12	201.2
	8"	11.31	29.02	22.93	9.23	7.54	M20	14.73	M12	11.72	12.20	M42	1.02	4.91	0.10	1.22	25.53	M20	8	F12	391.8

SIZE inch.		B	C	D	E	F	G	H	K	I	L	L2	M	N	R	T ± 1	V ± 0,5	Z	FM	N° G	ATT. ISO	WEIGHT Lbf
ANSI 300	2"	4.56	11.03	9.03	3.71	1.92	M16	6.48	M6	4.99	3.54	1.55	M16	0.39	1.96	0.31	0.88	-	M16	8	F05	28.4
	2" 1/2	5.50	15.28	13.08	4.81	2.55	M20	7.46	M8	5.86	4.25	2.04	M22	0.55	2.75	0.39	1.30	-	M20	8	F07	45.2
	3"	5.89	15.47	13.08	5.20	3.06	M20	8.25	M8	6.61	4.80	-	M22	0.55	2.75	0.39	1.30	-	M20	8	F07	60.8
	4"	6.40	17.55	14.53	5.83	3.77	M20	10.01	M10	7.85	6.06	-	M27	0.63	4.01	0.37	1.39	-	M20	8	F10	111.1
	5"	7.11	18.18	14.53	6.54	4.63	M20	11	M10	9.23	7.28	-	M27	0.63	4.01	0.37	1.39	-	M20	8	F10	155.4
	6"	9.50	27.57	22.93	7.85	5.65	M20	12.57	M12	10.60	9.25	-	M42	1.02	4.91	0.10	1.37	25.53	M20	12	F12	248.2
	8"	11.07	29.02	22.93	9.23	7.54	M24	14.92	M12	12.97	12.20	-	M42	1.02	4.91	0,.10	1.20	25.53	M24	12	F12	433.2

SIZE inch.		B	C	D	E	F	G	H	K	I	L	L2	M	N	R	T ± 1	V ± 0,5	Z	FM	N° G	ATT. ISO	WEIGHT Lbf
ANSI 600	DN50	5.03	15.71	13.16	4.34	1.92	M16	6.48	M8	4.99	4.33	1.77	M22	0.55	2.75	0.43	1.34	-	M16	8	F07	33.9
	DN65	5.50	15.71	13.16	4.81	2.55	M20	7.46	M8	5.86	4.72	2.14	M22	0.55	2.75	0.45	1.35	-	M20	8	F07	46.3
	DN80	6.20	17.87	14.53	5.60	3.06	M20	8.25	M10	6.61	5.91	2.59	M27	0.63	4.01	0.06	1.08	-	M20	8	F10	70.5
	DN100	8.68	26.70	22.38	6.83	3.77	M24	10.80	M12	8.48	7.48	3.08	M42	1.02	4.91	0.09	1.20	-	M27	8	F12	161.3

SELENE
ANSI

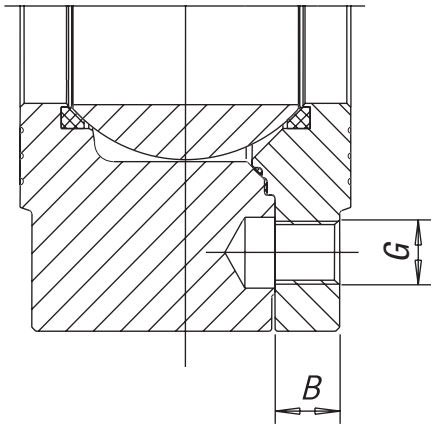

DRILLING UNI-EN 1092

	SIZE	G	B
ANSI150	2"	M16	18
	2" 1/2	M16	21
	3"	M16	23
	4"	M16	23
	5"	M20	23
	6"	M20	24
	8"	M20	28

	SIZE	G	B
ANSI300	2"	M16	21
	2" 1/2	M20	24
	3"	M20	27
	4"	M20	31
	5"	M20	31
	6"	M20	31
	8"	M24	35

	SIZE	G	B
ANSI600	2"	M16	25,5
	2" 1/2	M20	29
	3"	M20	32
	4"	M27	39

BREAKAWAY TORQUES in Lbf/inch.

psi	DN size	2"	2" 1/2	3"	4"	5"	6"	8"
	0	309.7	486.7	663.7	1327.5	2124	2743.5	5310
	ANSI150	345.1	522.1	747.8	1486.8	2655	3540	7080
	ANSI300	424.8	646.1	964.6	1902.7	3345.3	4531.2	9062.4
	ANSI600	477.9	716.8	1062	2097.4			

The values in Lbf/inch. may vary depending on the seat material, temperature and type of fluid. For reliable operation of various types of actuators, in different working conditions, is recommended a safety factor of 1.5.

PRESSURE/TEMPERATURE DIAGRAM

PTFE + METAL CORE
PTFE
PTFE + CARBOGRAPHITE

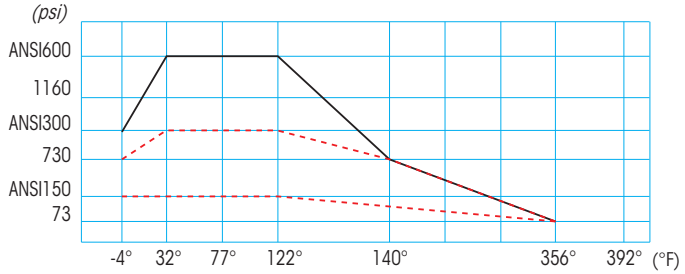

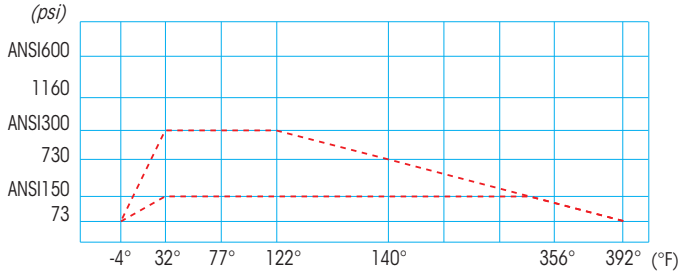

ANSI 150 PTFE **ANSI 300 PTFE** **ANSI 600 PTFE AM**

PEEK

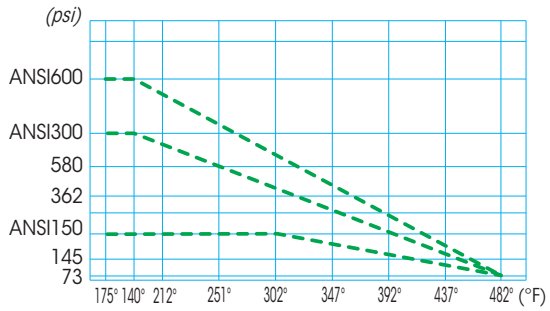

For Specifications about the Pressure-temperature Diagram and installation instructions - Consult our technical/commercial service