MOON ANSI WITH ELECTRIC ACTUATOR

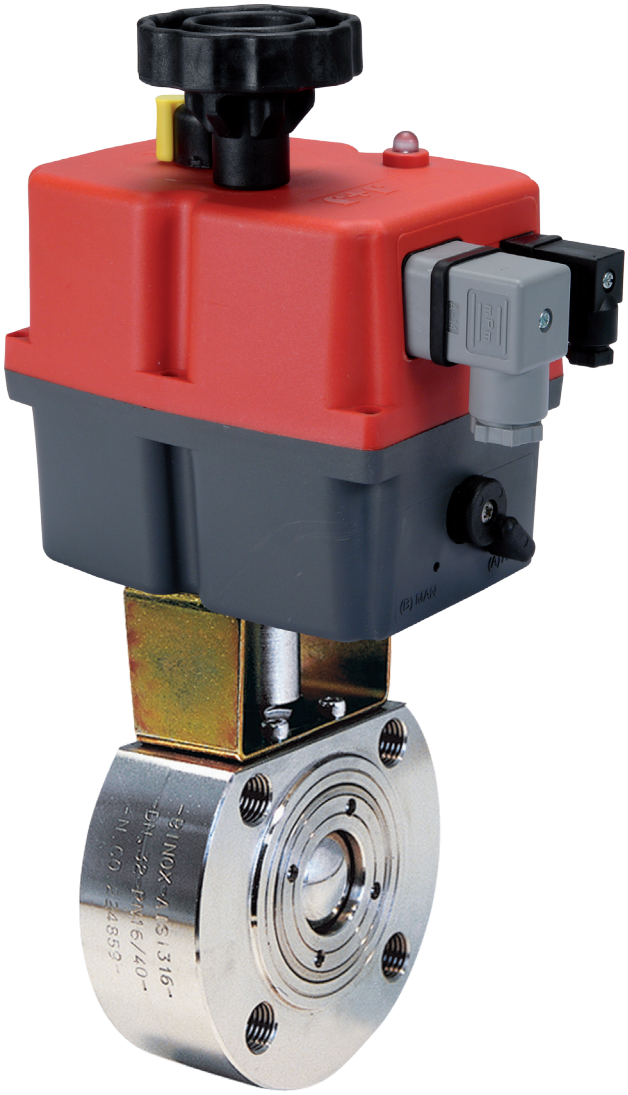

FUGITIVE EMISSIONS
TEST CERTIFICATE
UNI EN ISO 15848-1:2017

E4C 24-240 V AC/DC

AISI 316



art. E42AA...	AISI 316 1/2" - 4" ANSI 150
art. E56AA...	AISI 316L 1/2" - 2" ANSI 300
art. E58AA...	AISI 316 1/2" - 1" 1/2 ANSI 600

E4C 24-240 V AC/DC

A105



art. E52AA...	A105 1/2" - 4" ANSI 150
art. E55AA...	A105 1/2" - 2" ANSI 300
art. E59AA...	A105 1/2" - 1" 1/2 ANSI 600

EFFEBI®

UNI EN ISO 9001: 2015

EFFEBI U.S. - 30 Chapin Rd, Suite 1205 - PINE BROOK, NJ 07058
Tel. +1 973-287-7584 - E-mail: effebi.us@effebi.com
Internet: www.effebi.com

ISO 14001:2015

MOON ANSI
WHIT ELECTRIC ACTUATOR

E4C ACTUATOR FEATURES:
- **ROTATION ANGLE:** 90°.
- **TEMPERATURE LIMITS:** -4°F / +158°F.
- **SUPPLY VOLTAGE:** 24-240 VAC / DC 50 / 60 HZ.
- **PROTECTION DEGREE:** IP67.
- **STATIC TORQUE SUPPLIED:** 177 Lbf/inch. - 3097 Lbf/inch.
- **ROTATION TIME:** 10 s. - 48 s.
- **On Request is Available 12 V AC-DC 50 - 60 HZ**

STANDARD VALVE FEATURES:
- **STANDARDS:** BS EN ISO 17292 : 2004,
- **TEMPERATURE LIMITS** -4°F / +356°F ANSI 316L (PTFE).
  14°F / +356°F A105 (PTFE).
- **MAXIMUM WORKING PRESSURE:**
  ANSI 150 - ANSI 300 - ANSI 600
- **CONNECTIONS WITH FLANGES:** ANSI 150RF - ANSI 300RF - ANSI 600RF (ANSI B.15.5)
- **FLANGE DRILLING:** metric. (unc on request).

For general features and special versions refer to data on the manual valve. For further information on the actuator technical features refer to the specific data sheet for actuator at the end of this catalogue.
E4C • ER-E EQ

On request:
- EQ actuator is available for valves of all dimensions in Vac Vdc tension.

ANSI 150 - MOON STAINLESS STEEL + E4C ELECTRIC ACTUATOR

SIZE inch.	WEIGHT Lbf	A	B	C	E	ACTUATOR E4C	KIT FOR ACTUATOR
1/2"	7.2	7.11	4.32	6.64	9	20	K1GA0004
3/4"	8.2	7.11	4.32	6.64	9	20	K1GA0004
1"	10	7.11	4.32	6.64	10	20	K1GA1006
1" 1/4	11.9	7.11	4.32	6.64	11	20	K1GA0007
1" 1/2	15.1	7.11	4.32	6.64	11	35	K1GA1008
2"	18.7	7.11	4.32	7.70	12	55	K1GA0008
2" 1/2	30.1	7.11	4.32	7.70	13	85	K1GA0010
3"	42.7	9.23	8.40	9.97	16	140	K1GA0010
4"	56.2	9.23	8.40	9.97	17	300	K1GA0012

ANSI 300 - MOON STAINLESS STEEL + E4C ELECTRIC ACTUATOR

SIZE inch.	WEIGHT Lbf	A	B	C	E	ACTUATOR E4C	KIT FOR ACTUATOR
1/2"	9.2	7.11	4.32	6.64	9.62	20	K1GA3004
3/4"	11	7.11	4.32	6.64	9.92	20	K1GA3004
1"	12.7	7.11	4.32	6.64	10.85	20	K1GA3006
1" 1/4	16.3	7.11	4.32	6.64	11.11	35	K1GA3007
1" 1/2	24.1	7.11	4.32	7.70	12.35	55	K1GA3008
2"	32.7	7.11	4.32	7.70	13.08	85	K1GA3009

ANSI 600 - MOON STAINLESS STEEL + E4C ELECTRIC ACTUATOR

SIZE inch.	WEIGHT Lbf	A	B	C	E	ACTUATOR E4C	KIT FOR ACTUATOR
1/2"	9.4	7.11	4.32	6.64	9.62	20	K1GA3004
3/4"	12.2	7.11	4.32	6.64	9.92	20	K1GA3005
1"	15.5	7.11	4.32	6.64	10.85	35	K1GA3116
1" 1/4	20.1	7.11	4.32	7.70	12.17	55	K1GA3117
1" 1/2	28.1	7.11	4.32	7.70	12.35	85	K1GA3108

SECTION

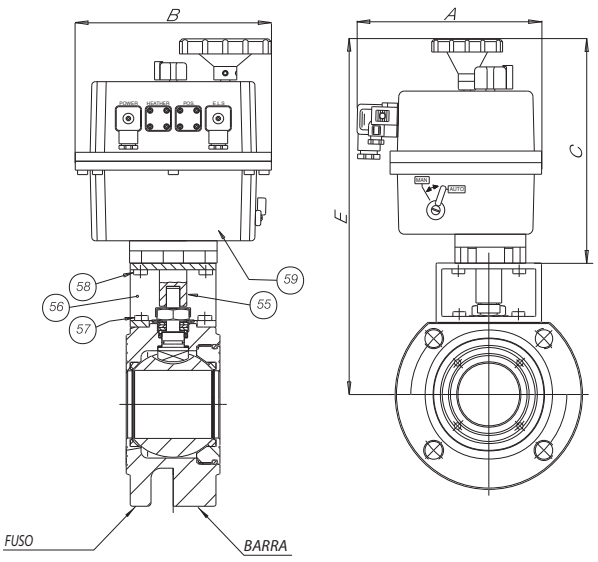

LIST OF COMPONENTS AND MATERIALS

55	ACTUATOR PIN	1	C.S. ZINC.
56	BRACKET	1	C.S. ZINC.
57	BRACKET/VALVE SCREW	4	8.8 ZINC.
58	BRACKET/ACTUATOR SCREW	4	8.8 ZINC.
59	ACTUATOR	1	POLYAMIDE