MOON ANSI



MADE IN ITALY

Marine & Offshore

BUREAU VERITAS

TYPE APPROVAL CERTIFICATE
(AISI36L max.580 PSI CWP)

FIRE SAFE
Max. ANSI 300

ISO 15848-1:2017 FUGITIVE EMISSION TEST

FUGITIVE EMISSIONS
TEST CERTIFICATE
UNI EN ISO 15848-1:2017

TÜV KNOW-HOW CLUB TÜV Hessen PROFI Member

SIL (IEC 61508)

Atex CE Ex II 2 G D*
★ *on request*

art. M10AN	ANSI 150 - AISI 316L FROM BAR **

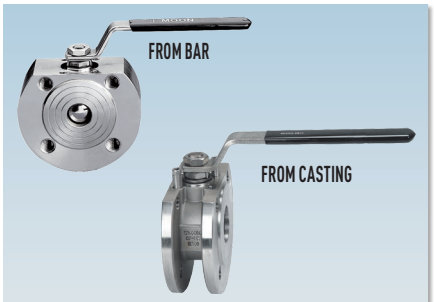

art. M10AN	ANSI 150 - AISI 316L FROM BAR ** from 1/2" to 2"
art. M10AN	ANSI 150 - AISI 316 FROM CASTING from 2 1/2" to 4"
art. N10B	ANSI 300 - AISI 316L FROM BAR ** from 1/2" to 2"
art. N10D	ANSI 600 - AISI 316L FROM BAR ** from 1/2" to 1"1/2



art. M30AN	ANSI 150 - AISI 304L FROM BAR ** from 1/2" to 2"
art. M30AN	ANSI 150 - AISI 304 FROM CASTING from 2"1/2 to 4"



art. M70AN	ANSI 150 - A105 FROM BAR from 1/2" to 4"
art. N50B-N70B	ANSI 300 - A105 FROM BAR from 1/2" to 2"
art. N50D	ANSI 600 - A105 FROM BAR from 1/2" to 1" 1/2

MAIN STANDARD FEATURES:

- **CONSTRUCTION:** AISI 316L (from bar) - AISI 304L (from bar) - A105 (from bar).
  A351 CF8M AISI 316 (from casting)
  A351 CF8 AISI 304 (from casting)
- **STANDARDS:** BS EN ISO 17292:2004.
- **CERTIFICATION:** FIRE SAFE according to BS 6755 - API 6 FA - API 607 (for only ANSI 150 / ANSI 300).
  Fugitive Emission UNi EN ISO 15848-1:2017
  Up to SIL3 IEC 61508
- **DIAMETERS:** ANSI 150 1/2" – 4"
  ANSI 300 1/2" – 2"
  ANSI 600 1/2" - 1"1/2
- **PRESSURES:** ANSI 150 - ANSI 300 - ANSI 600.
- **TEMPERATURE LIMITS:** -4°F / 356°F AISI 316L (PTFE)
  14°F / +356°F A105 (PTFE).
- **CONNECTIONS with flanges:** ANSI 150RF – ANSI 300RF – ANSI 600RF (ANSI B16.5).
- **FLANGE DRILLING:** ANSI 150 metric – ANSI 300 metric - ANSI 600 metric.
- **STEM:** Anti blow out with anti-static device.
- **ANTISTATIC DEVICE:** starting from DN25 (on request DN15 -DN 20).
- **SEAL:** triple patented stem-packing with labyrinth effect and automatic adjustment by Belleville washers.
- **UPPER CONNECTION:** ISO 5211.
- **OPERATOR:** lever. Available colours: black, yellow.

EFFEBI®

EFFEBI U.S. - 30 Chapin Rd, Suite 1205 - PINE BROOK, NJ 07058
Tel. +1 973-287-7584 - E-mail: effebi.us@effebi.com
Internet: www.effebi.com

UNI EN ISO 9001: 2015
ISO 14001:2015

MOON
ANSI

GENERAL APPLICATIONS:
ON-OFF valve for: chemical products, food plants, distribution lines for gas, air, water. Suitable for Vacuum (not high vacuum), steam up to 392°F with PTFE+CARBOGRAPHITE SEATS.

SPECIAL EXECUTIONS:
- PTFE+ 15% GLASS FIBER + 374°F.
- PTFE + CARBOGRAPHITE +392°F (optimum from 140°F to 392°F).
- PTFE seals with metal core (on request).
- HDPE seals (PTFE free)
- Integral seal in PTFE (DN15 – DN100) from bar (max 232 Psi).
- Plain and through drilled flange drilling.
- Special thread: UNC
- Reduction gears with manual operator.
- Stem extension, 2 inch. or 4 inch.
- Heating jacket (see MOON CR)
- Ball with relief hole
- Degrease execution for oxygen (only AISI316L) – max. 290 Psi
- Body, ring nut, stem and ball in Aisi316L
- Body and ring nut in ASTM A350 LF2
- Bottom valve (tie-rods are also supplied)
- For further information, please contact our technical/commercial dept
- ANSI 150 2" 1/2 - 8" (see model Selene)
- ANSI 300 2" 1/2 - 4" (see model Selene)
- ANSI 600 2" - 4" (see model Selene)

CONSTRUCTION

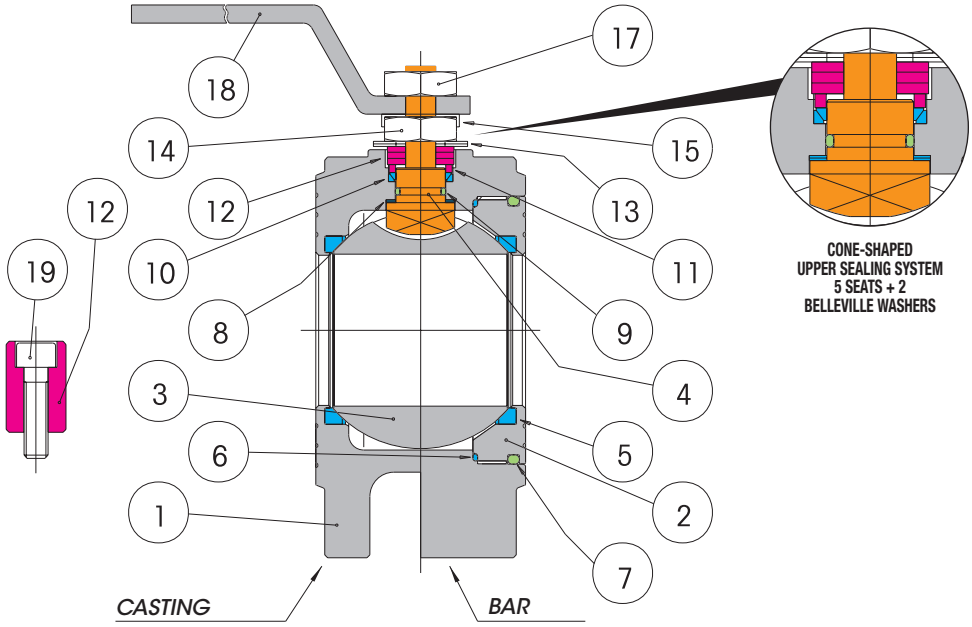

LIST OF COMPONENTS AND MATERIALS

			AISI 316 Casting	AISI 316L ** Bar	AISI 304L Bar	A105 Bar	N°
1		BODY	AISI 316	AISI 316L	AISI 304L	A105	1
2		RING NUT	AISI 316	AISI 316	AISI 304	A105	1
3		BALL	AISI 316	AISI 316	AISI 316 / AISI 304***	AISI 316 / AISI 304***	1
4		STEM	AISI 316	AISI 316	AISI 304	AISI 304	1
5		SEAT	PTFE	PTFE	PTFE	PTFE	2
6		SIDE SEALING RING	PTFE	PTFE	PTFE	PTFE	1
7		O-RING	NBR	NBR	NBR	NBR	1
8		UPPER SEALING RING	PTFE	PTFE	PTFE	PTFE	2
9		STEM O-RING	VITON	VITON	VITON	VITON	1
10		UPPER SEALING COUPLE	PTFE	PTFE	PTFE	PTFE	1
11		GLAND WASHER	AISI 304	AISI 304	AISI 304	AISI 304	1
12		STOP	AISI 304	AISI 304	AISI 304	AISI 304	1
13		BELLEVILLE WASHERS	AISI 301	AISI 301	AISI 301	50CrV4	2
14		STEM RETAINING NUT	AISI 304	AISI 304	AISI 304	C.S.	1
15		FIXING NUT PLATE	AISI 304	AISI 304	AISI 304	AISI 304	1
17		LOCKING NUT	AISI 304	AISI 304	AISI 304	C.S.	1
18		LEVER	AISI 304	AISI 304	AISI 304	C.S.	1
19		STOP SCREW	AISI 304	AISI 304	AISI 304	C.S.	1

- Internal stop up to DN20 included
- External stop (see ⑫ ⑲) from DN25

*** BALL: DN15 - DN20 AISI 316
DN25 - DN100 AISI 304

MOON
ANSI

EFFEBI

SECTION

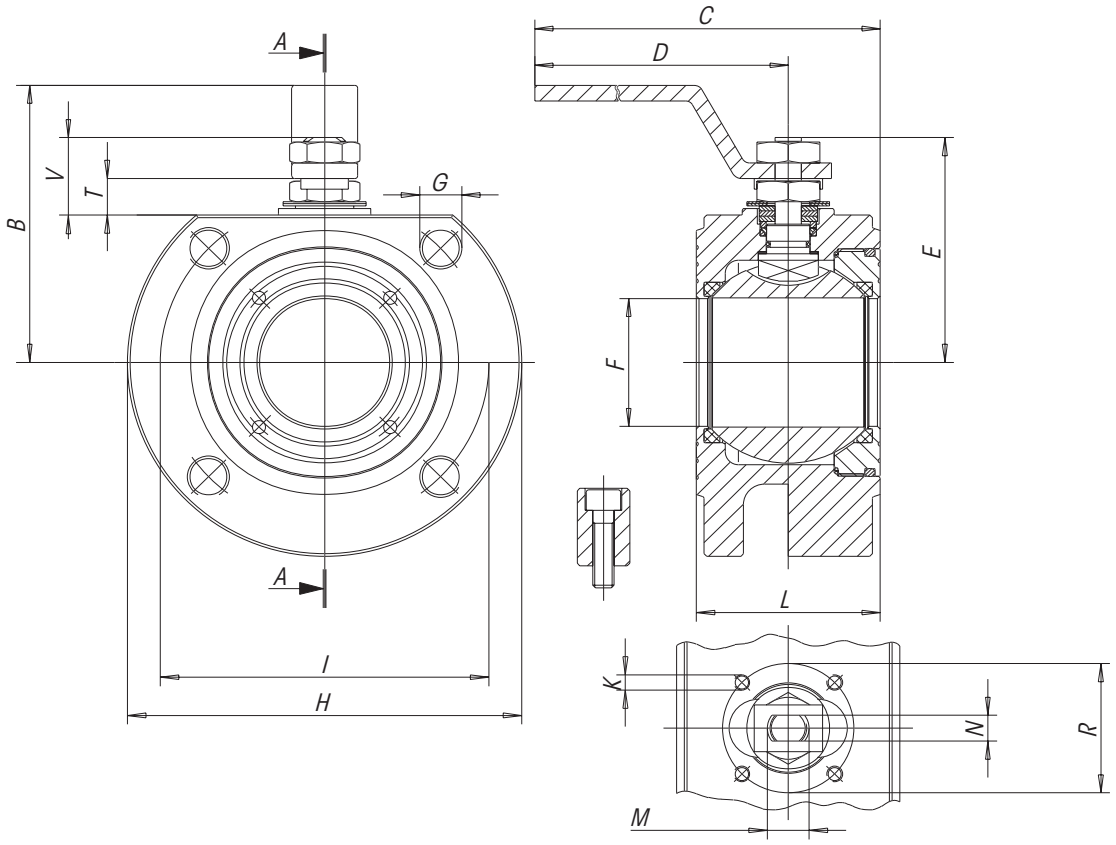

	SIZE inch.	B	C	D	E	F	G	H CAST	H BAR	K	I	L	LND*	M	N	R	T ± 1	V ± 0,5	N° G	Class	ATT. ISO	WEIGHT Lbf.	Cv
ANSI 150	1/2"	2.55	6.28	5.50	1.88	0.59	M12	-	3.50	M5	2.38	1.37	1.37	M10	0.24	1.41	0.31	0.67	4	ANSI150	F03	2.65	23.1
	3/4"	2.75	6.28	5.50	2	0.79	M12	-	3.89	M5	2.75	1.49	1.49	M10	0.24	1.41	0.31	0.67	4	ANSI150	F03	3.64	69.3
	1"	3.22	7.85	7.07	2.49	0.98	M12	-	4.24	M5	3.12	1.69	1.69	M12	0.31	1.65	0.43	0.94	4	ANSI150	F04	5.40	115.6
	1"1/4	3.34	8.13	7.07	2.67	1.26	M12	-	4.63	M5	3.50	2.12	2.12	M12	0.31	1.65	0.37	0.86	4	ANSI150	F04	7.34	150.2
	1"1/2	4.01	10.21	9.03	3.14	1.57	M12	-	4.99	M6	3.87	2.36	2.59	M16	0.39	1.96	0.55	1.18	4	ANSI150	F05	10.27	196.5
	2"	4.32	10.41	9.03	3.42	1.96	M16	6.48	5.97	M6	4.73	2.75	3.26	M16	0.39	1.96	0.55	1.18	4	ANSI150	F05	12.79	323.6
	2"1/2	5.40	14.92	13.08	4.81	2.55	M16	7.26	6.99	M8	5.48	3.73	4.04	M22	0.55	2.75	0.73	1.67	4	ANSI150	F07	22.82	589.5
	3"	5.89	15.51	13.08	5.20	3.06	M16	7.85	7.46	M8	5.99	4.79	4.79	M22	0.55	2.75	0.73	1.67	4	ANSI150	F07	30.64	890.1
	4"	6.48	17.28	14.53	5.83	3.77	M16	8.64	8.64	M10	7.48	5.50	6.01	M27	0.63	4.01	0.84	1.87	8	ANSI150	F10	44.09	1387.2

For DN125, 150 and 200 see "SELENE" split body wafer valve *Special FTF on request

	SIZE inch.	B	C	D	E	F	G	H BAR	K	I	L	M	N	R	T ± 1	V ± 0,5	N° G	Class	ATT. ISO	WEIGHT Lbf.	Cv
ANSI 300	1/2"	2.59	6.32	5.50	1.88	0.59	M12	3.74	M5	2.62	1.65	M10	0.24	1.41	0.12	0.47	4	ANSI300	F03	4.63	23.1
	3/4"	2.87	6.40	5.50	2.18	0.79	M16	4.61	M5	3.24	1.81	M10	0.24	1.41	0.12	0.47	4	ANSI300	F03	6.39	69.3
	1"	3.53	8.05	7.07	2.68	0.98	M16	4.86	M5	3.49	1.96	M12	0.31	1.65	0.35	0.82	4	ANSI300	F04	8.09	115.6
	1"1/4	3.73	8.13	7.07	2.87	1.26	M16	5.22	M5	3.89	2.12	M12	0.31	1.65	0.27	0.75	4	ANSI300	F04	11.46	150.2
	1"1/2	4.28	10.33	9.03	3.44	1.57	M20	6.11	M6	4.49	2.59	M16	0.39	1.96	0.55	1.14	4	ANSI300	F05	18.10	196.5
	2"	4.56	10.68	9.03	3.71	1.96	M16	6.48	M6	4.99	3.26	M16	0.39	1.96	0.10	0.69	8	ANSI300	F05	25.51	323.6

	SIZE inch.	B	C	D	E	F	G	H BAR	K	I	L	M	N	R	T ± 1	V ± 0,5	N° G	Class	ATT. ISO	WEIGHT Lbf.	Cv
ANSI 600	1/2"	2.63	6.72	5.50	1.88	0.59	M12	3.73	M5	2.62	2.16	M10	0.24	1.41	0.12	0.47	4	ANSI600	F03	4.85	23.1
	3/4"	2.95	6.72	5.50	2.18	0.79	M16	4.52	M5	3.24	2.36	M10	0.24	1.41	0.12	0.47	4	ANSI600	F03	7.61	69.3
	1"	3.50	8.36	7.07	2.68	0.98	M16	4.91	M5	3.49	2.55	M12	0.31	1.65	0.35	1.22	4	ANSI600	F04	10.69	115.6
	1"1/4	3.65	8.60	7.07	2.87	1.26	M16	5.30	M5	3.86	2.95	M12	0.31	1.65	0.27	0.75	4	ANSI600	F04	14.11	150.2
	1"1/2	4.32	10.76	9.03	3.44	1.57	M20	6.09	M6	4.49	3.34	M16	0.39	1.96	0.55	1.14	4	ANSI600	F05	20.83	196.5

MOON
ANSI

METRIC DRILLING HOLES

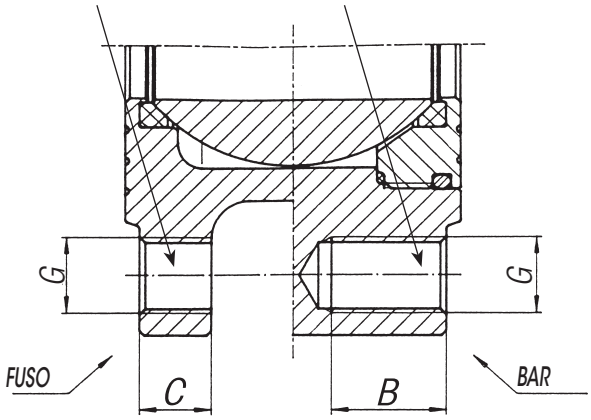

DRILLING ANSI 150

SIZE	G	B inch.	C inch.
1/2"	M12	0.51	0
3/4"	M12	0.55	0
1"	M12	0.63	0
1"1/4	M12	0.67	0
1"1/2	M12	0.75	0
2"	M16	0.79	0.65
2"1/2	M16	0.94	0.65
3"	M16	0.94	0.72
4"	M16	0.94	0.72

DRILLING ANSI 300 / ANSI 600

SIZE	G	B ANSI/300 inch.	B ANSI/600 inch.	C inch.
1/2"	M12	0.51	0.59	0
3/4"	M16	0.59	0.63	0
1"	M16	0.63	0.71	0
1"1/4	M16	0.71	0.83	0
1"1/2	M20	0.79	0.91	0
2"	M16	0.83	-	0

BREAKAWAY TORQUES in Lbf/in.

	DN size	1/2"	3/4"	1"	1"1/4	1"1/2	2"	2"1/2	3"	4"
psi	0	35.4	61.9	88.5	141.6	221.2	309.7	486.7	663.7	1327.5
	ANSI 150	42.4	75.2	100	168.1	247.8	345.1	522.1	747.8	1486.8
	ANSI 300	53.1	92.9	115.1	199.1	278.7	389.4			
	ANSI 600	63.7	111.5	138.1	265.5	354				

The values in Lbf/inch may vary depending on the seat material, temperature and type of fluid. For reliable operation of various types of actuators, in different working conditions, is recommended a safety factor of 1.5.

PRESSURE/TEMPERATURE DIAGRAM

PTFE

PTFE + CARBOGRAPHITE

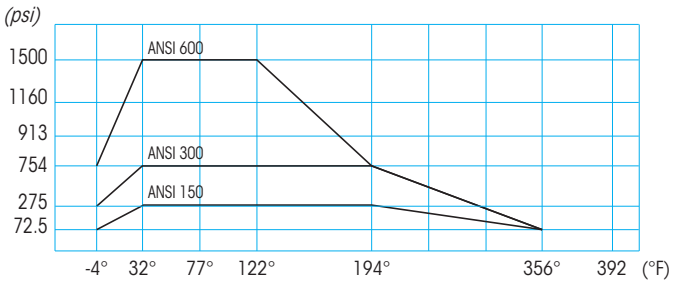

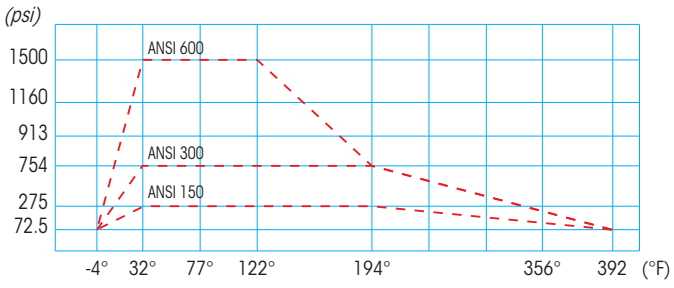

MIN. WORKING TEMPERATURE, AISI316= -4°F **LF2=** -4°F **A105=** 14°F

For Specifications about the Pressure-temperature Diagram and installation instructions