# MONOBLOCK A105

## NPT SW-BW




FIRE SAFE
ISO 10497:2010 *

FIRE SAFE
PTFE + CARBOGRAPHITE
BS 6755 - API 6 FA
API 607

Atex CE Ex II 2 G D*
* on request

**800 - 1500 psi**

**PTFE**

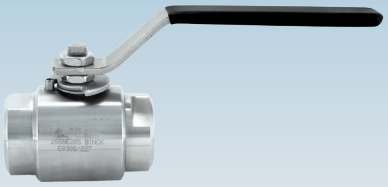

| | |
|---|---|
| art. 2651X5... | F/F NPT 1/4" - 4" |
| art. 2652 | SW 1/4" - 4" |
| art. 2653 | BW 1/4" - 4" |

**3000 psi**

**DELRIN**



| | |
|---|---|
| art. 2685E5... | F/F NPT 1/4" - 4" |
| art. 2686E | SW 1/4" - 4" |
| art. 2687E | BW 1/4" - 4" |

**2300/1700/800 psi**

**PTFE + CARBOGRAPHITE**



| | |
|---|---|
| art. 2685D5... | F/F NPT 1/4" - 4" |
| art. 2686D | SW 1/4" - 4" |
| art. 2687D | BW 1/4" - 4" |

**MAIN STANDARD FEATURES:**

- **CONSTRUCTION:** ASTM A105.
- **STANDARDS:** BS EN ISO 17292:2004.
- **CERTIFICATION:** FIRE SAFE according to BS 6755 – API 6 FA – API 607. (Only PTFE + CRB)
- **ON REQUEST: FIRE SAFE ANSI/API Std. 607 ISO 10497:2010**
  **NACE MR 0.175 - on request**
- **CONNECTIONS:** F/F NPT ANSI B1.20.1.
  SW ANSI B16.11 socket weld
  BW ANSI B16.25 butt weld
  800 psi - 1500 psi sch.80 std.
  3000 psi sch.160 std.
- **PRESSURES:**
  SÉRIES 800 psi: 1/4" - 4" PTFE
  SÉRIES 1500 psi: 1/4" - 2" PTFE
  SÉRIES 2300-1700-800 psi
  2300 psi 1/4" - 1" CARBOGRAPHITE
  1700 psi 1"1/4 - 2" CARBOGRAPHITE
  800 psi 2"1/2 - 4" CARBOGRAPHITE
  SÉRIES 3000 psi: 1/4" - 4" DELRIN (max 158 °F).
- **TEMPERATURE LIMITS:**
  -4°F / +356°F - PTFE
  up to +392°F - PTFE+CARBOGRAPHITE
  (optimum from 104°F to 392°F).
  -4°F / +158°F - DELRIN.
- **STEM:** Anti blow out with anti-static device.
- **OPERATOR:** lever. Available colours: black, red.

**GENERAL APPLICATIONS:**

**ON-OFF valve for:** high pressures and temperatures in industrial plants, refineries, water and pneumatic installations, steam up to 392°F.
For special applications please check the suitability of the valve for the process and the required corrosion resistancy using the relevant table.

**SPECIAL EXECUTIONS:**

- **MATERIAL:** body made of ASTM A350 LF2.
- Ball with relief hole.
- Peek for high temperatures size up to +482°F (up to 2").
- Upon request, BW ANSI B16.25 butt weld sch40.
- **Nace MR 0.175 ASTM A350 LF2 on request.**
- **Locking device (open/close).**
- **Oval Handwheel up to 1".**
- **Available on request with ISO 5211 drilling for actuation (with bracket)**
- For further special requests please consult our technical/commercial service.

EFFEBI®

**EFFEBI U.S.** - 30 Chapin Rd, Suite 1205 - PINE BROOK, NJ 07058
Tel. +1 973-287-7584 - E-mail: effebi.us@effebi.com
Internet: www.effebi.com

ICIM UNI EN ISO 9001: 2015
ICIM ISO 14001:2015

# MONOBLOCK
## A105 NPT SW-BW

EFFEBI

## CONSTRUCTION

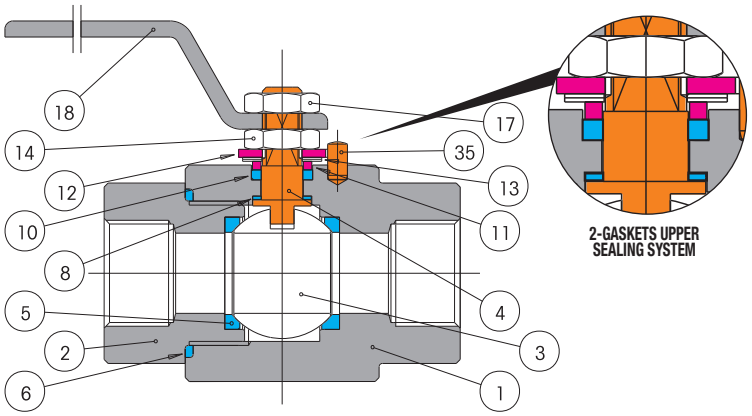


### LIST OF COMPONENTS AND MATERIALS

| | | | | |
|---|---|---|---|---|
| 1 | | BODY | ASTM A105 ZINC. | 1 |
| 2 | | FEMALE END | ASTM A105 ZINC. | 1 |
| 3 | | BALL | AISI 304L/AISI316L* | 1 |
| 4 | ● | STEM | AISI 316L | 1 |
| 5 | ● | SEAT | PTFE | 2 |
| 6 | ● | SIDE SEALING O-RING | VITON | 1 |
| 8 | ● | UPPER SEALING RING | PTFE | 2 |
| 10 | ● | UPPER SEAL | PTFE | 1 |
| 11 | ● | GLAND WASHER | ASTM A105 | 1 |
| 12 | ● | STOP | C.S. ZINC. | 1 |
| 13 | | BELLEVILLE WASHERS | 50CrV4 | 2 |
| 14 | | STEM RETAINING NUT | C.S. ZINC. | 1 |
| 17 | | LOCKING NUT | C.S. ZINC. | 1 |
| 18 | | LEVER | C.S. ZINC. | 1 |
| 35 | ● | PIN | C.S. ZINC. | 1 |

* AISI316L Ball, up to 1"1/4 included, for greater sizes AISI304 ball.

## SECTION

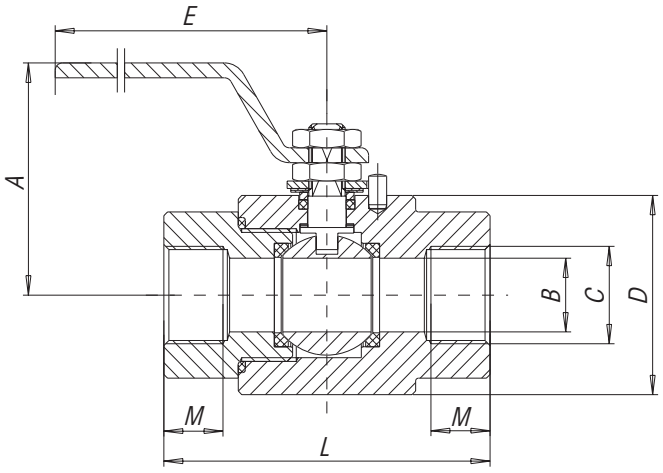


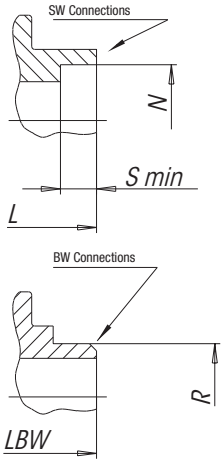


While welding the SW and BW extension nipples, cool the valve body in order not to damage the seals. The body temperature MUST never exceed 248°F.
Slags and impurities MUST NEVER penetrate inside the valve.

| SIZE inch. | A | B | D | E | L | LBW | M | N | S | R | WEIGHT Lbf NPT | WEIGHT Lbf SW | WEIGHT Lbf BW | Cv |
|---|---|---|---|---|---|---|---|---|---|---|---|---|---|---|
| 1/4" | 2.83 | 0.39 | 1.65 | 5.81 | 2.63 | 3.73 | 0.43 | 0.56 | 0.37 | 0.54 | 1.34 | 1.34 | 1.39 | 12.7 |
| 3/8" | 2.83 | 0.39 | 1.65 | 5.81 | 2.63 | 3.73 | 0.45 | 0.70 | 0.37 | 0.68 | 1.36 | 1.36 | 1.43 | 12.7 |
| 1/2" | 2.95 | 0.59 | 1.96 | 5.81 | 2.95 | 4.12 | 0.59 | 0.86 | 0.37 | 0.84 | 2.05 | 2.05 | 2.31 | 23.1 |
| 3/4" | 3.34 | 0.79 | 2.36 | 7.07 | 3.53 | 4.91 | 0.64 | 1.07 | 0.50 | 1.05 | 3.42 | 3.42 | 3.53 | 69.3 |
| 1" | 3.73 | 0.98 | 2.67 | 7.07 | 4.12 | 5.50 | 0.75 | 1.34 | 0.50 | 1.31 | 4.99 | 4.99 | 5.18 | 115.6 |
| 1"1/4 | 3.93 | 1.18 | 3.18 | 9.42 | 4.71 | 6.28 | 0.84 | 1.68 | 0.50 | 1.66 | 7.28 | 7.28 | 7.50 | 150.2 |
| 1"1/2 | 4.12 | 1.49 | 3.69 | 9.42 | 5.30 | 7.07 | 0.84 | 1.92 | 0.50 | 1.90 | 10.69 | 10.69 | 11.90 | 196.5 |
| 2" | 4.52 | 1.88 | 4.12 | 11.00 | 6.09 | 8.64 | 1.01 | 2.41 | 0.62 | 2.37 | 14.31 | 14.31 | 14.99 | 323.6 |
| 2"1/2 | 5.11 | 2.55 | 5.11 | 14.92 | 7.46 | 9.82 | 1.19 | 2.90 | 0.60 | 2.87 | 28.66 | 28.66 | 29.54 | 589.5 |
| 3" | 5.69 | 2.87 | 5.89 | 14.92 | 8.05 | 11.00 | 1.31 | 3.53 | 0.62 | 3.49 | 37.48 | 37.48 | 38.58 | 890.1 |
| 4" | 7.85 | 3.69 | 7.26 | 18.46 | 9.03 | 12.96 | 1.54 | 4.54 | 0.75 | 4.49 | 52.91 | 52.91 | 54.01 | 1387.2 |

### BREAKAWAY TORQUES in Lbf/in.

| psi | DN size | 10 1/4" - 3/8" | 15 1/2" | 20 3/4" | 25 1" | 32 1"1/4 | 40 1"1/2 | 50 2" | 65 2"1/2 | 80 3" | 100 4" |
|---|---|---|---|---|---|---|---|---|---|---|---|
| | 0 | 88.5 | 106.2 | 141.6 | 185.8 | 477.9 | 575.2 | 761.1 | 1239 | 1619.5 | 2389.5 |
| | 800 | 132.7 | 164.6 | 203.5 | 238.9 | 708 | 739.8 | 1120.4 | 1681.5 | 2124 | 3097.5 |
| | 1500 | 150.4 | 200 | 223 | 261.9 | 778.8 | 822.1 | 1159.3 | 1858.5 | 2301 | 3442.6 |
| | 2320 | 146 | 218.6 | 235.4 | 277 | 867.3 | 929.2 | 1283.2 | 2212.5 | 2699.2 | 4026.7 |
| | 3000 | 207.1 | 244.2 | 265.5 | 307.9 | 973.5 | 1035.4 | 1416 | 3363 | 3800 | 4469.2 |

The values in Lbf/inch. may vary depending on the seat material, temperature and type of fluid.
A safety factor of 1,5 should be used (for PTFE).

### PRESSURE/TEMPERATURE DIAGRAM

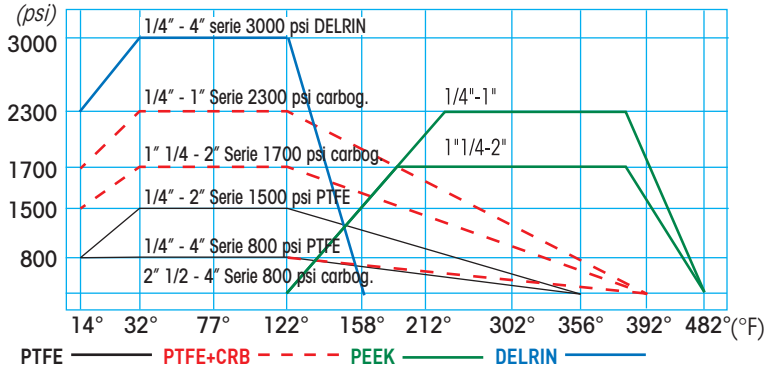


For Specifications about the Pressure-temperature Diagram and installation instructions