MONOBLOCK 6000



See Pressure-temperature Diagram
6000 Psi

FIRE SAFE DESIGN

Atex CE Ex II 2 G D*
* on request

6000 psi

DELRIN 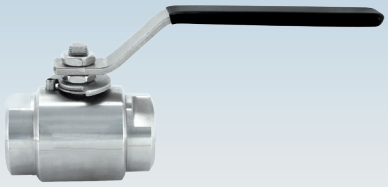	art. 2666F5...	F/F NPT 1/4" - 1"	AISI316L
	art. 2666H5...		A105
	art. 2666J5...		ASTM A350 LF2
	art. 2666F45..	SW 1/4" - 1"	AISI316L
	art. 2666H45..		A105
	art. 2666J45..		LF ASTM A350 LF2
	art. 2666F47..	BW 1/4" - 1"	AISI316L
	art. 2666H47..		A105
	art. 2666J47..		ASTM A350 LF2

MAIN STANDARD FEATURES:
- **CONSTRUCTION:** AISI 316L - ASTM A105 - LF2.
- **STANDARDS:** BS EN ISO 17292:2004.
- **CONNECTION:** F/F NPT. ANSI B1.20.1.
  SW ANSI B16.11 socket weld
  BW ANSI B16.25 butt weld sch.160 std.
- **PRESSURES:**
  SERIE 6000 psi: 1/4" - 1" DELRIN (max 158°F).
- **TEMPERATURE LIMITS: LF2:** -4°F / +158°F.
  A105: 14°F / +158°F.
  AISI316: -4°F / +158°F.
- **STEM:** Anti blow out with anti-static device.
- **OPERATOR:** lever. Available colours: black, red.

GENERAL APPLICATIONS:
ON-OFF valve for: high pressures and temperatures in industrial plants, refineries, hydraulic and pneumatic systems.
For special applications please check the suitability of the valve for the process and the required corrosion resistancy using the relevant table.

SPECIAL EXECUTIONS:
- **MATERIALS:** body in ASTM A350 LF2.
- Ball with relief hole
- On request BW ANSI B16.25 butt weld sch80.
- **AISI 316L: NACE MR 0.175 - on request**
- **LF2 from bar: NACE MR 0.175 - on request**
- **Locking device (open/close).**
- **Oval Handeheel up to 1".**
- For further special requests please consult our technical/commercial service.

EFFEBI®

EFFEBI U.S. - 30 Chapin Rd, Suite 1205 - PINE BROOK, NJ 07058
Tel. +1 973-287-7584 - E-mail: effebi.us@effebi.com
Internet: www.effebi.com

ICIM UNI EN ISO 9001: 2015
ICIM ISO 14001:2015

MONOBLOCK ®
6000

CONSTRUCTION

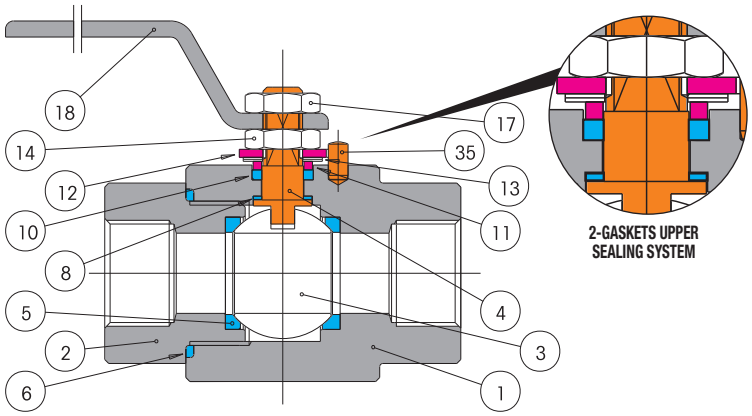

LIST OF COMPONENTS AND MATERIALS

1		BODY	AISI 316L	ASTM A105 (ZINC.)	1
2		FEMALE END	AISI 316L	ASTM A105 (ZINC.)	1
3		BALL	AISI 316L	AISI 304L/AISI316L*	1
4		STEM	AISI 316L		1
5		SEAT	DERLIN		2
6		SIDE SEALING O-RING	VITON		1
8		UPPER SEALING RING	PTFE + CRB		2
10		UPPER SEAL	PTFE + CRB		1
11		GLAND WASHER	S.S.	A105	1
12		STOP	S.S.	C.S. ZINC.	1
13		BELLEVILLE WASHERS	S.S.	50CrV4	2
14		STEM RETAINING NUT	S.S.	C.S. ZINC.	1
17		LOCKING NUT	S.S.	C.S. ZINC.	1
18		LEVER	S.S.	C.S. ZINC.	1
35		PIN	S.S.	C.S. ZINC.	1

✱ Ball AISI316L up to 1" enclosed, in addition to the ball AISI304L

SECTION

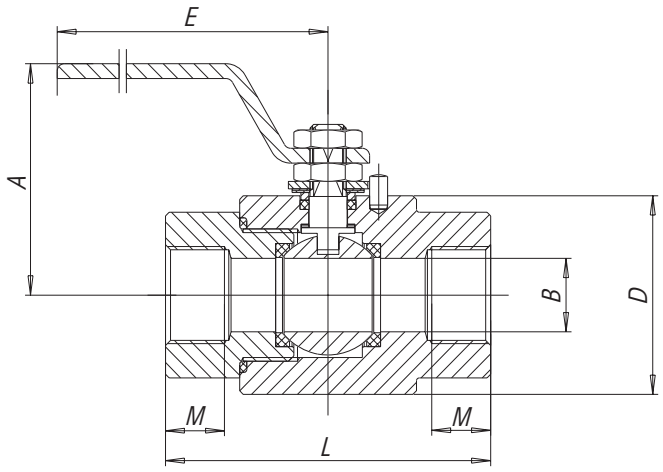

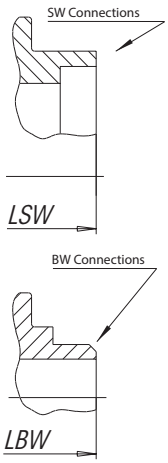

When connecting to SW or BW pipe the body of the valve must be allowed to cool properly so as to not damage the seals. The body temperature must NOT exceed 248° F. and slags MUST NOT be allowed to enter the valve.

SCH 160
Type SW and BW only with integrated long nipples 3,93"

SIZE inch.	A	B	E	L NPT	L SW-BW	M	WEIGHT Lbf NPT	WEIGHT Lbf SW	WEIGHT Lbf BW
1/4"	2.95	0.39	5.81	2.95	10.80	0.43	1.36	2.09	2.20
3/8"	2.95	0.39	5.81	2.95	10.80	0.45	2.05	2.20	2.20
1/2"	3.34	0.59	7.07	3.53	11.39	0.59	3.42	4.41	4.41
3/4"	3.73	0.79	7.07	4.12	11.98	0.64	4.99	8.82	8.82
1"	3.93	0.98	9.42	4.71	12.57	0.75	7.28	12.13	11.02

BREAKAWAY TORQUES in Lbf/in.

psi	DN size	10 1/4" - 3/8"	15 1/2"	20 3/4"	25 1"
	0	115.1	132.7	168.1	221.2
	800	159.3	194.7	247.8	274.3
	1500	177	230.1	256.6	300.9
	3000	238.9	274.3	300.9	345.1
	6000	398.2	433.6	460.2	504.4

The values in Lbf/in may vary depending on the seat material, temperature and type of fluid.
A safety factor of 1,5 should be used (for PTFE).

PRESSURE/TEMPERATURE DIAGRAM

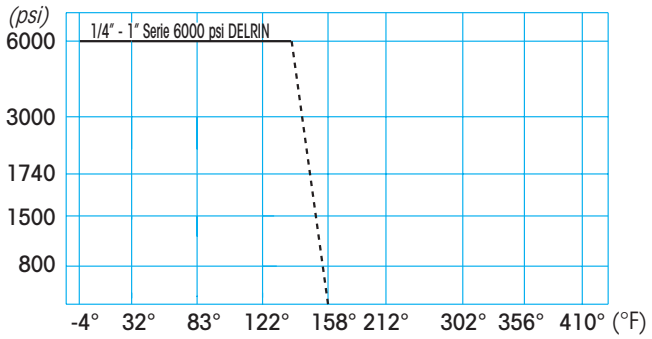

For Specifications about the Pressure-temperature Diagram and installation instructions