ELECTRIC ACT. E4C SERIES

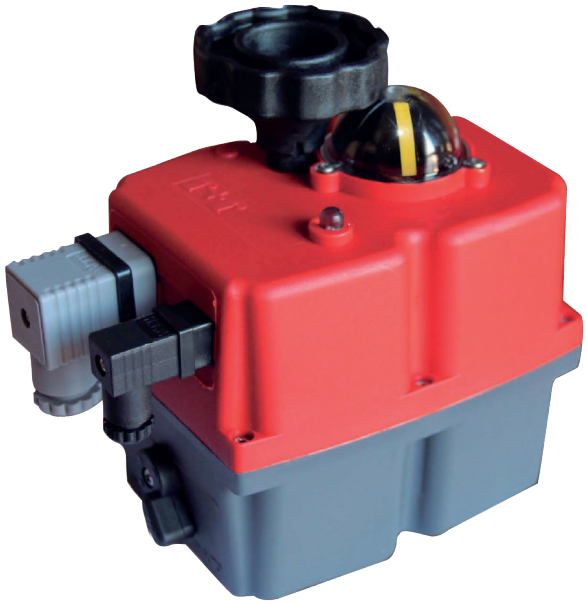



GENERAL APPLICATIONS

The actuator is suitable for industrial and heating plants; it can be used with 2/3-way ball valves and butterfly valves.

OPERATION: The actuator is preset for an ON-OFF type control. The actuator has two stop positions controlled by two electro-mechanical limit switches with two other electro-mechanical limit switches for the valve open-valve close signal. They also offer the possibility to use the valve for proportional control by selecting intermediate positions which are given by the input signal (optional: positioning data sheet dps).

MATERIALS:

BODY	POLYAMIDE
COVER	POLYAMIDE
CAMS	POLYAMIDE
SHAFT	STAINLESS STEEL

DIMENSIONS

E4C - 020-035

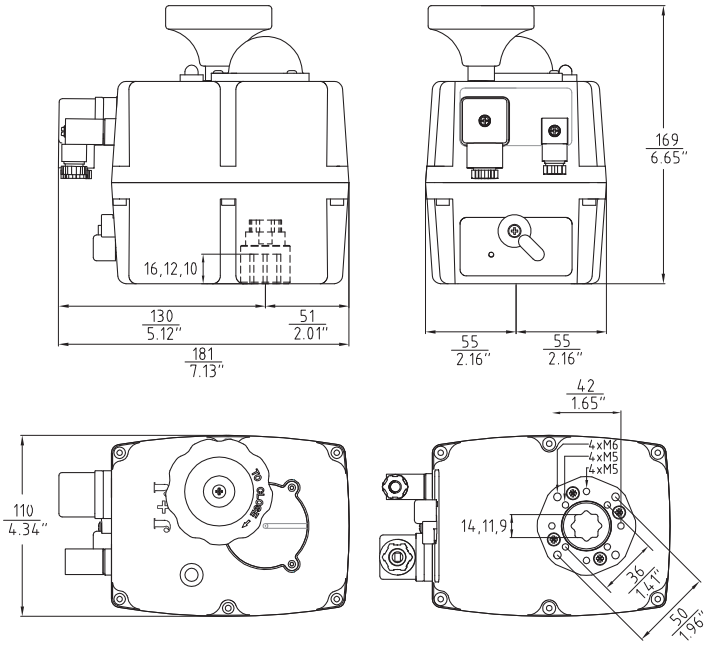

E4C - 055

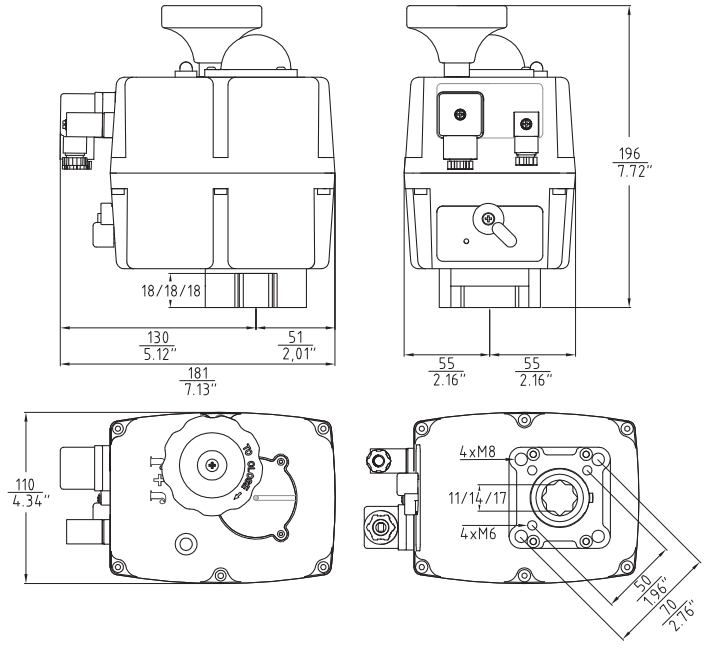

EFFEBI U.S. - 30 Chapin Rd, Suite 1205 - PINE BROOK, NJ 07058
Tel. +1 973-287-7584 - E-mail: effebi.us@effebi.com
Internet: www.effebi.com

UNI EN ISO 9001: 2015

ISO 14001:2015

DIMENSIONS

E4C - 085

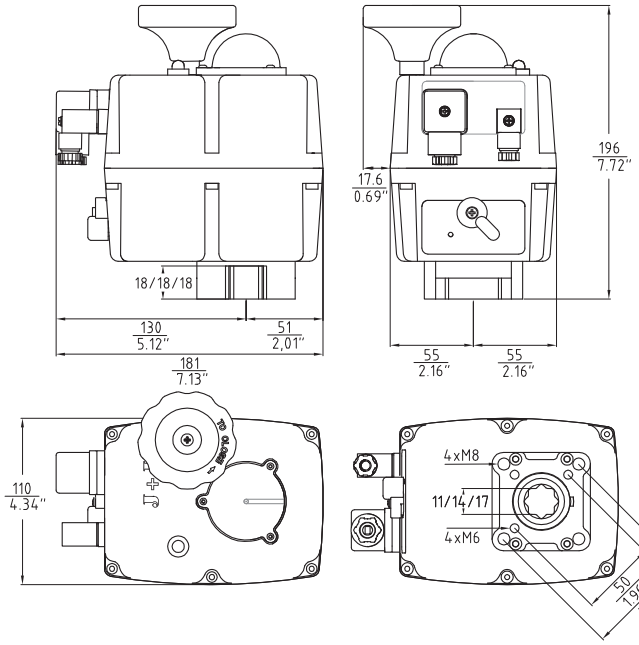

E4C - 140-300

TECHNICAL FEATURES AND ACCESSORIES FOR EFFEBI E00/EL/EH ACTUATORS

ACTUATOR MODEL	020	035	055	085	140	300
POWER SUPPLY	V	V	V	V	V	V
VOLTAGE (V) DC - AC (50Hz / 60HZ)	from 24 VAC-DC to 240 VAC/DC	from 24 VAC-DC to 240 VAC/DC	from 24 VAC-DC to 240 VAC/DC	from 24 VAC-DC to 240 VAC/DC	from 24 VAC-DC to 240 VAC/DC	from 24 VAC-DC to 240 VAC/DC
OPERATION TIME (sec)	10	10	13	29	25	48
STATIC TORQUE Nm - Lbf/inch.	25/221	37/327	60/351	90/796	170/1504	350/3097
OPERATION TORQUE Nm - Lbf/inch.	20/177	35/309	55/486	85/752	140/1239	300/2655
CONSUMPTION AT MAX TORQUE ± 5%	24 VDC 0.97 A - 23.39 W 48 VDC 0.46 A - 22.07 W 110 VDC 0.14 A - 15.70 W 24 VAC 1.29 A - 30.62 W 48 VAC 0.75 A - 36.22 W 110 VAC 0.30 A - 32.67 W 240 VAC 0.16 A - 39.07 W	24 VDC 1.37 A - 32.79 W 48 VDC 0.59 A - 28.20 W 110 VDC 0.18 A - 20.10 W 24 VAC 1.67 A - 40.13 W 48 VAC 0.99 A - 47.31 W 110 VAC 0.38 A - 41.87 W 240 VAC 0.20 A - 47.52 W	24 VDC 1.63 A - 39.02 W 48 VDC 0.67 A - 32.31 W 110 VDC 0.21 A - 23.20 W 24 VAC 1.98 A - 47.52 W 48 VAC 1.21 A - 58.29 W 110 VAC 0.43 A - 46.95 W 240 VAC 0.21 A - 50.16 W	24 VDC 1.22 A - 29.30 W 48 VDC 0.53 A - 25.56 W 110 VDC 0.16 A - 17.90 W 24 VAC 1.50 A - 36.01 W 48 VAC 0.86 A - 41.18 W 110 VAC 0.33 A - 36.54 W 240 VAC 0.18 A - 42.77 W	24 VDC 2.53 A - 60.72 W 48 VDC 1.10 A - 52.80 W 110 VDC 0.39 A - 42.35 W 24 VAC 3.30 A - 79.20 W 48 VAC 1.79 A - 86.06 W 110 VAC 0.72 A - 78.65 W 240 VAC 0.44 A - 105.60 W	24 VDC 2.70 A - 64.68 W 48 VDC 1.19 A - 57.02 W 110 VDC 0.39 A - 42.35 W 24 VAC 3.30 A - 79.20 W 48 VAC 1.87 A - 89.76 W 110 VAC 0.77 A - 84.70 W 240 VAC 0.47 A - 113.52 W
PROTECTION DEGREE	IP67	IP67	IP67	IP67	IP67	IP67
STANDARD ROTATION	90° BIDIRECTIONAL	90° BIDIRECTIONAL	90° BIDIRECTIONAL	90° BIDIRECTIONAL	90° BIDIRECTIONAL	90° BIDIRECTIONAL
EMERGENCY MANUAL CONTROL	YES	YES	YES	YES	YES	YES
POSITION INDICATOR	YES	YES	YES	YES	YES	YES
STD MOTOR LIMIT SWITCH	2	2	2	2	2	2
OP-CL SIGNAL LIMIT SWITCH	2	2	2	2	2	2
OPTIONAL LIMIT SWITCHES	2	2	2	2	2	2
WEIGHT Lbf/inch.	3.97	4.19	5.29	6.61	11.46	11.46
OPERATION TEMPERATURE F°	-4°F / +158°F	-4°F / +158°F	-4°F / +158°F	-4°F / +158°F	-4°F / +158°F	-4°F / +158°F
ISO 5211 STANDARD	F03/F04/F05	F03/F04/F05	F05/F07	F05/F07	F07/F10	F07/F10
STD SQUARE PIN	DOUBLE SQUARE PIN 14 0.55 inch.	DOUBLE SQUARE PIN 14 0.55 inch.	DOUBLE SQUARE PIN 17 0.67 inch.	DOUBLE SQUARE PIN 17 0.67 inch.	DOUBLE SQUARE PIN 22 0.87 inch.	DOUBLE SQUARE PIN 22 0.87 inch.
ANTI-CONDENSATION RESISTOR	YES 3.5W	YES 3.5W	YES 3.5W	YES 3.5W	YES 3.5W	YES 3.5W
POSITIONER 4-20 Ma	UPON REQUEST	UPON REQUEST	UPON REQUEST	UPON REQUEST	UPON REQUEST	UPON REQUEST
POWER SUPPLY UNIT	UPON REQUEST	UPON REQUEST	UPON REQUEST	UPON REQUEST	UPON REQUEST	UPON REQUEST
POTENTIOMETER	UPON REQUEST	UPON REQUEST	UPON REQUEST	UPON REQUEST	UPON REQUEST	UPON REQUEST

WIRING DIAGRAMS

J4C 20/85 3 WIRES V AC/DC

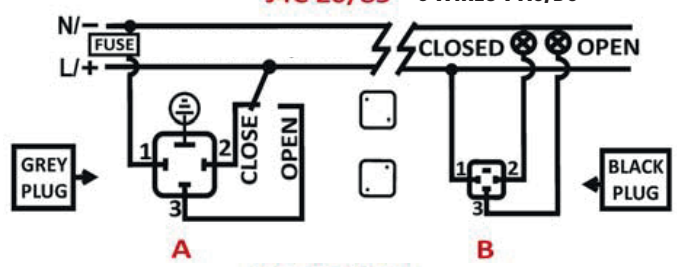

J4C 140/300 3 WIRES V AC/DC

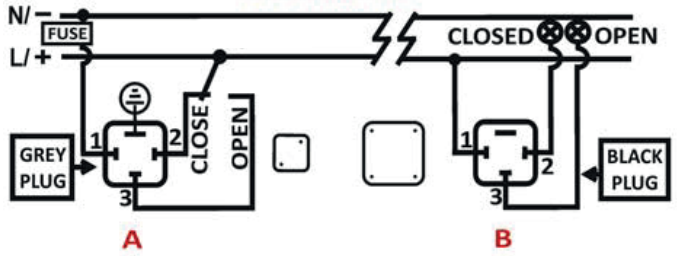

J4C 20/85 2 WIRES V DC

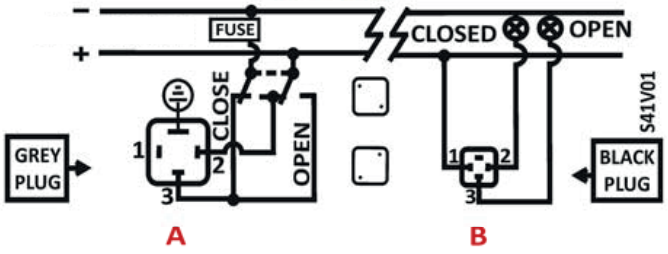

J4C 140/300 2 WIRES V DC

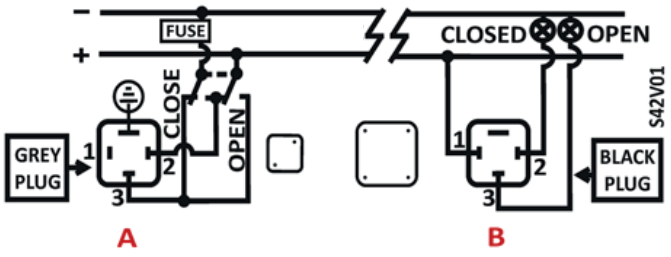

POSITIONER J4C 20/85 2 WIRES V AC/DC c

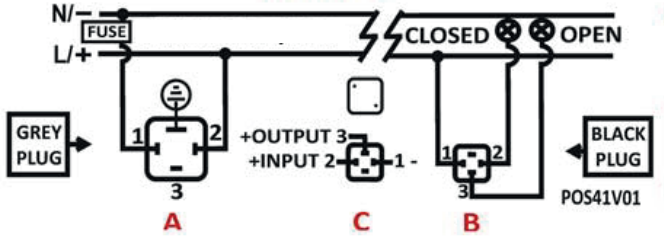

POSITIONER J4C 140/300 2 WIRES V AC/DC c

