ARGOS WITH PNEUMATIC ACTUATOR



Atex CE Ex*

* on request

DOUBLE ACTING



art. D71AA50	F/F NPT 1/4" - 2"
art. D71AA45	SW 1/4" - 2"
art. D71AA47	BW 1/4" - 2"

SINGLE ACTING



art. S71AA50	F/F NPT 1/4" - 2"
art. S71AA45	SW 1/4" - 2"
art. S71AA47	BW 1/4" - 2"

EFFEBI®

EFFEBI U.S. - 30 Chapin Rd, Suite 1205 - PINE BROOK, NJ 07058
Tel. +1 973-287-7584 - E-mail: effebi.us@effebi.com
Internet: www.effebi.com

ICIM UNI EN ISO 9001: 2015
ICIM ISO 14001:2015

ARGOS

ACTUATOR FEATURES:
- **ROTATION ANGLE:** 90°.
- **TEMPERATURE LIMITS:** -4°F / +194°F.
- **MAXIMUM SUPPLY PRESSURE:** 145 Psi (116 Psi for DNA045).
- **NOMINAL PRESSURE:** 81.5 Psi.
- **SUPPLY FLUID:** filtered compressed air.
- **LUBRICATION:** NBR compatible oil to be used.
- Long regulation pin for the regulation from 0° up to 90° (on request)

For further information on the actuator technical features refer to the specific data sheet for actuator at the end of this catalogue.

STANDARD VALVE FEATURES:
- **TEMPERATURE LIMITS:** 14°F / +302°F (PTFE).
  use up to + 356°F (PTFE+CRB)
- **MAXIMUM WORKING PRESSURE:** 2000 psi 1/4" - 1"
  1500 psi 1" 1/4 - 2"
- **CONNECTIONS:** F/F NPT ANSI B1.20.1
  SW ANSI B16.11 socket weld
  BW ANSI B16.25 butt weld sch40.

For general applications and special executions, see the manual valve.

DOUBLE ACTING

SIZE inch.	WEIGHT Lbf	A	B	C	E	F	CH esag.	L	M	N	ACTUATOR	KIT
1/4"	2.73	4.56	2.75	2.67	0.82	6.01	0.81	2.36	1.65	0.43	DNA045AZ00	K1GA0002
3/8"	2.73	4.56	2.75	2.67	0.82	6.01	0.92	2.36	1.65	0.50	DNA045AZ00	K1GA0002
1/2"	4.02	5.22	3.06	2.91	1.02	6.81	1.16	2.95	2.04	0.63	DGA052AX00	K1GA0304
3/4"	5.46	5.22	3.06	2.91	1.18	7.01	1.37	3.14	2.34	0.77	DGA052AX00	K1GA0305
1"	10.09	5.38	3.50	3.46	1.41	7.80	1.69	3.53	2.83	0.98	DGA063AX00	K1GA0406
1"1/4	12.51	5.38	3.50	3.46	1.57	7.93	2.08	4.32	3.12	1.26	DGA063AX00	K1GA0407
1"1/2	17.04	6.32	4.01	3.93	1.77	8.91	2.40	4.71	3.53	1.50	DGA075AX00	K1GA0408
2"	22.01	7.07	4.24	4.24	1.98	9.56	2.98	5.50	3.97	1.99	DGA083AX00	K1GA0408

SINGLE ACTING

SIZE inch.	WEIGHT Lbf	A	B	C	E	F	CH esag.	L	M	N	ACTUATOR	KIT
1/4"	5.11	5.38	3.50	3.46	0.82	7.19	0.81	2.36	1.65	0,43	SGA0634X00	K1GA0102
3/8"	5.11	5.38	3.50	3.46	0.82	7.19	0.92	2.36	1.65	0,50	SGA0634X00	K1GA0102
1/2"	7.37	6.32	4.01	3.93	1.02	7.83	1.16	2.95	2.04	0,63	SGA0754X00	K1GA0404
3/4"	8.81	6.32	4.01	3.93	1.18	8.03	1.37	3.14	2.34	0,77	SGA0754X00	K1GA0405
1"	13.53	7.07	4.24	4.24	1.41	8.58	1.69	3.53	2.83	0,98	SGA0834X00	K1GA0506
1"1/4	15.95	7.07	4.24	4.24	1.57	8.72	2.08	4.32	3.12	1,26	SGA0834X00	K1GA0507
1"1/2	25.57	8.72	4.71	5.50	1.77	10.49	2.40	4.71	3.53	1,50	SNA1104X00	K1GA0408
2"	29.21	8.72	4.71	5.50	1.98	10.82	2.98	5.50	3.97	1,99	SNA1104X00	K1GA0408

SECTION

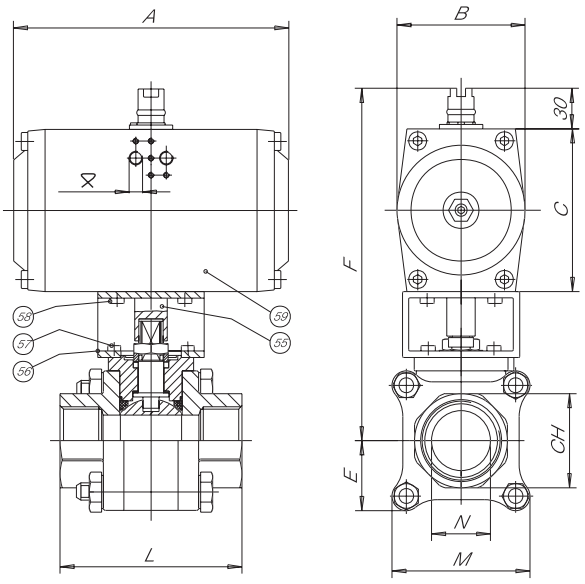

LIST OF COMPONENTS AND MATERIALS

55	ACTUATOR PIN	1	C.S. ZINC.
56	BRACKET	1	C.S. ZINC.
57	BRACKET/VALVE SCREW	4	8.8 ZINC.
58	BRACKET/ACTUATOR SCREW	4	8.8 ZINC.
59	ACTUATOR	1	AL. ANODIZED

⧖ Up to size 092= 1/8"G
110÷190=1/4"G