ARGOS FIRE SAFE WITH PNEUMATIC ACTUATOR



HEAVY DUTY

Atex CE Ex*

* on request

DOUBLE ACTING



art. D71FA50	F/F NPT 1/4" - 2"
art. D71FA45	SW 1/4" - 2"
art. D71FA47	BW 1/4" - 2"

SINGLE ACTING



art. S71FA50	F/F NPT 1/4" - 2"
art. S71FA45	SW 1/4" - 2"
art. S71FA47	BW 1/4" - 2"

EFFEBI®

UNI EN ISO 9001: 2015

EFFEBI U.S. - 30 Chapin Rd, Suite 1205 - PINE BROOK, NJ 07058
Tel. +1 973-287-7584 - E-mail: effebi.us@effebi.com
Internet: www.effebi.com

ISO 14001:2015

ARGOS
FIRE SAFE

ACTUATOR FEATURES:
- **ROTATION ANGLE:** 90°.
- **TEMPERATURE LIMITS:** -4°F / +194°F.
- **MAXIMUM SUPPLY PRESSURE:** 145 Psi (116 Psi for DNA045).
- **NOMINAL PRESSURE:** 81.5 Psi.
- **SUPPLY FLUID:** filtered compressed air.
- **LUBRICATION:** NBR compatible oil to be used.
- Long regulation pin for the regulation from 0° up to 90° (on request)

For further information on the actuator technical features refer to the specific data sheet for actuator at the end of this catalogue.

STANDARD VALVE FEATURES:
- **TEMPERATURE LIMITS:** 14°F / +347°F (RPTFE).
  use up to + 356°F (PTFE+CRB)
- **MAXIMUM WORKING PRESSURE:** 1500 Psi 1" 1/4 - 2"
- **CONNECTIONS:** F/F NPT ANSI B1.20.1
  SW ANSI B16.11 socket weld
  BW ANSI B16.25 butt weld sch40.

For general applications and special executions, see the manual valve.

DOUBLE ACTING

SIZE inch.	WEIGHT Lbf	A	B	C	E	ACTUATOR	KIT
1/4"	4.59	5.38	3.50	3.46	7.96	DGA063AXDR	K1GAF002
3/8"	4.59	5.38	3.50	3.46	7.96	DGA063AXDR	K1GAF002
1/2"	4.74	5.38	3.50	3.46	7.96	DGA063AXDR	K1GAF002
3/4"	5.18	5.38	3.50	3.46	8.08	DGA063AXDR	K1GAF004
1"	7.72	6.32	4.01	3.93	8.97	DGA075AXDR	K1GAF006
1"1/4	14.11	8.21	4.71	4.59	9.82	DGA092AXDR	K1GAF006
1"1/2	14.55	8.21	4.71	4.59	9.86	DGA092AXDR	K1GAF008
2"	19.18	8.76	4.71	5.50	10.93	DNA110AXDR	KI1GAF009

SINGLE ACTING

SIZE inch.	WEIGHT Lbf	A	B	C	E	ACTUATOR	KIT
1/4"	6.79	6.32	4.01	3.93	8.43	SGA0755XDR	K1GAF102
3/8"	6.79	6.32	4.01	3.93	8.43	SGA0755XDR	K1GAF102
1/2"	6.94	6.32	4.01	3.93	8.43	SGA0755XDR	K1GAF102
3/4"	8.49	7.07	4.24	4.24	8.87	SGA0835XDR	K1GAF104
1"	9.59	7.07	4.24	4.24	9.28	SGA0835XDR	K1GAF006
1"1/4	24.91	11.55	4.71	5.50	10.72	SNA1184XDR	K1GAF107
1"1/2	25.35	11.55	4.71	5.50	10.77	SNA1184XDR	KI1GAF009
2"	31.31	11.82	5.38	6.28	11.71	SNA1274XDR	KI1GAF009

SECTION

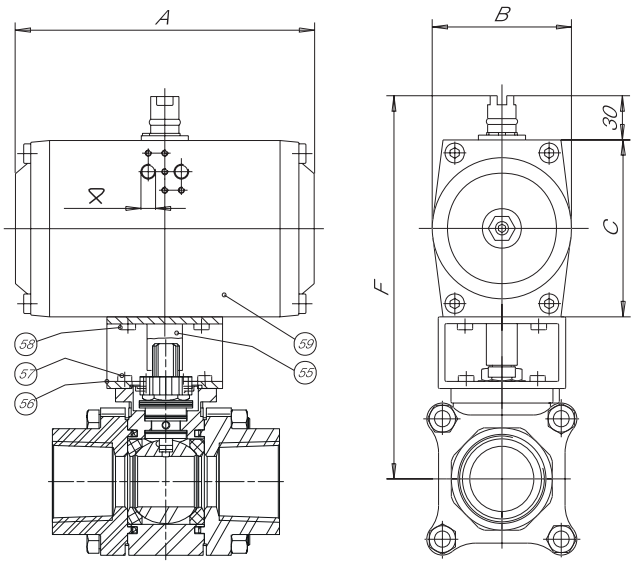

⧖ Up to size 092= 1/8"G
110÷190=1/4"G

LIST OF COMPONENTS AND MATERIALS

55	ACTUATOR PIN	1	C.S. ZINC.
56	BRACKET	1	C.S. ZINC.
57	BRACKET/VALVE SCREW	4	8.8 ZINC.
58	BRACKET/ACTUATOR SCREW	4	8.8 ZINC.
59	ACTUATOR	1	AL. ANODIZED