ARGOS FIRE SAFE



See Pressure-temperature Diagram
1500 Psi

HEAVY DUTY

FIRE SAFE

ANSI / API Std. 607 : 2005
ISO 10497 : 2004

Atex CE Ex II 2 G D*
* Available on request (from 3/4" up to 2")

art. F806A5..	F/F NPT 1/4" - 2"	art. F812A4..	SW 1/4" - 2"	art. F816A4..	BW 1/4" - 2"

MAIN STANDARD FEATURES:

- **CONSTRUCTION:** A216 WCB
- **CONNECTION:** F/F NPT ANSI B1.20.1
  SW ANSI B16.11 socket weld
  BW ANSI B16.25 butt weld sch.40
- **PRESSURES:** 1500 psi 1/4" - 2"
- **TEMPERATURE LIMITS:** +14°F / +347°F (RPTFE).
- **STEM:** Anti blow out with anti-static device.
- **OPERATOR:** lever with locking device.
- **MOUNTING PLATE:** ISO 5211 for actuator.

GENERAL APPLICATIONS:

ON-OFF valve for: chemical and petrolchemical. The valves are certified **FIRE SAFE** and are designed and manufactured in order to allow inspection and maintenance in line removing the valve body only. For special application please check the suitability of the valve for the process and the required corrosion resistancy using the relevant table.

SPECIAL EXECUTIONS:

- For further special requests please consult our technical/commercial service.

EFFEBI®

EFFEBI U.S. - 30 Chapin Rd, Suite 1205 - PINE BROOK, NJ 07058
Tel. +1 973-287-7584 - E-mail: effebi.us@effebi.com
Internet: www.effebi.com

ICIM UNI EN ISO 9001: 2015
ICIM ISO 14001:2015

ARGOS
FIRE SAFE

EFFEBI

CONSTRUCTION

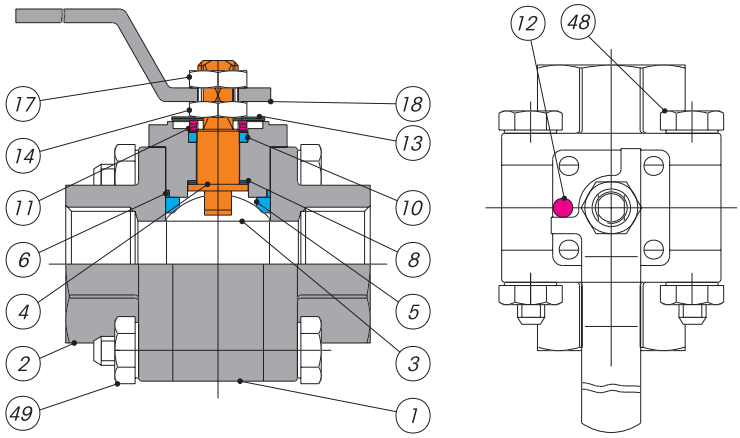

LIST OF COMPONENTS AND MATERIALS

1		BODY	A216-WCB	1
2		FEMALE END	A216-WCB	2
3		BALL	AISI 316	1
4		STEM	AISI 316	1
5		SEAT	RPTFE	2
6		SIDE SEALING RING	GRAPHITE	2
8		UPPER SEALING RING	NOVA/PEEK	2
10		UPPER SEAL	GRAPHITE	4
11		GLAND WASHER	AISI 304	1
12		OPERATION STOP	AISI 304	1
13		STOP	AISI 301	4
14		STEM RETAINING NUT	AISI 304	1
17		LOCKING NUT	AISI 304	1
18		LEVER	AISI 304	1
48		SCREW	S.S.	4
49		NUT	S.S.	4

SECTION

While welding the SW and BW extension nipples, cool the valve body to avoid damaging the seals. The body temperature must NEVER exceed 248°F. Slags and impurities MUST NEVER penetrate inside the valve .

CONFIGURATION FOR HANDLE

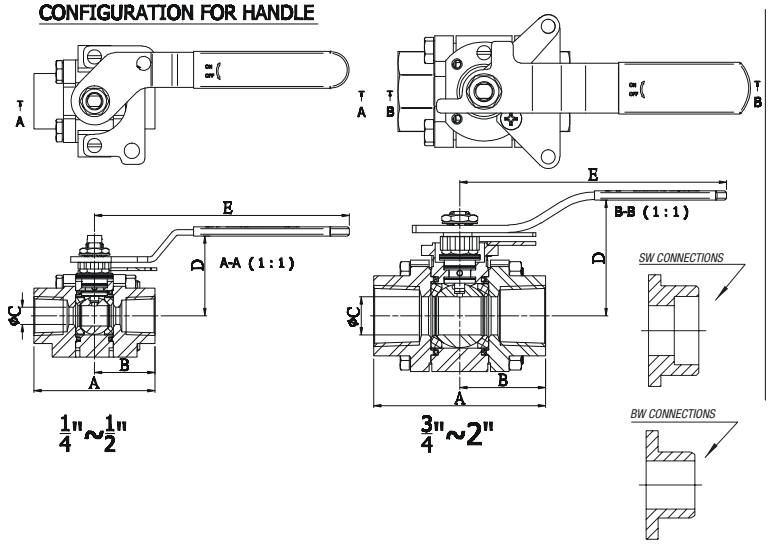

CONFIGURATION FOR ACTUATION

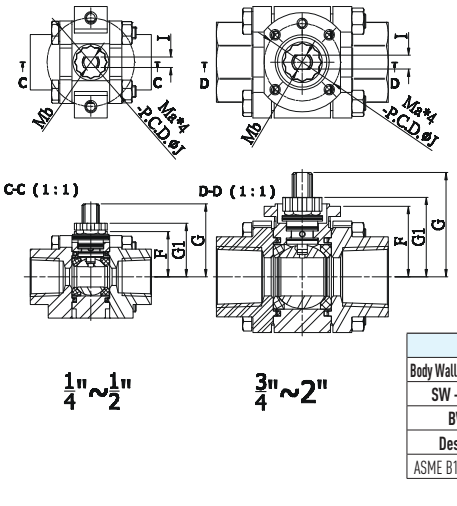

STANDARDS	
Body Wall Thickness	ASME B16.34
SW - NPT	ASME B16.11
BW	ASME B16.25
Design	ASME B16.34 (note 1)
ASME B16.34 on request	

SIZE inch.	DN	A	B	C	D	E	F	G	G1	I	WEIGHT Lbf	Ø J	Mb	Ma
1/4" - 1/2"	15	2.59	1.30	0.36	1.72	5.46	0.97	1.56	1.15	0.22	1.54	1.88	3/8"-24UNF	M6
3/4"	20	2.87	1.43	0.56	2.08	4.50	1.09	1.65	1.26	0.22	1.98	1.41	3/8"-24UNF	M5
1"	25	3.71	1.85	0.82	2.49	5.77	1.50	2.23	1.70	0.29	3.09	1.65	7/16"-20UNF	M5
1"1/4	32	4.23	2.12	1	2.68	5.77	1.69	2.42	1.89	0.29	6.61	1.65	7/16"-20UNF	M5
1"1/2	40	4.57	2.28	1.25	2.93	6.77	1.74	2.89	2.17	0.34	7.05	1.96	9/16"-18UNF	M6
2"	50	5.01	2.51	1.50	3.11	6.77	1.90	3.08	2.36	0.34	7.72	1.96	9/16"-18UNF	M6

BREAKAWAY TORQUES in Lbf/in.

psi	size	1/4"	3/8"	1/2"	3/4"	1"	1"1/4	1"1/2	2"
	0	115.1	115.1	115.1	132.7	212.4	327.4	415.9	557.5
	800	159.3	159.3	159.3	212.4	274.3	504.4	699.1	955.8
	1500	194.7	194.7	194.7	238.9	292.1	752.2	876.1	1194.7

The values in Lbf/in may vary depending on the seat material, temperature and type of fluid.
A safety factor of 1,5 should be used (for RPTFE).

PRESSURE/TEMPERATURE DIAGRAM

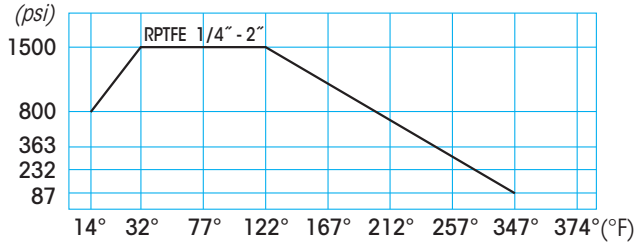

For Specifications about the Pressure-temperature Diagram and installation instructions