ANTARES ANSI
WITH PNEUMATIC ACTUATOR



MADE IN ITALY

ISO 15848-1:2017 FUGITIVE EMISSION TEST

FUGITIVE EMISSIONS
TEST CERTIFICATE
UNI EN ISO 15848-1:2017
Only PTFE until ANSI 300

Atex CE Ex *

★ *on request*

DOUBLE ACTING

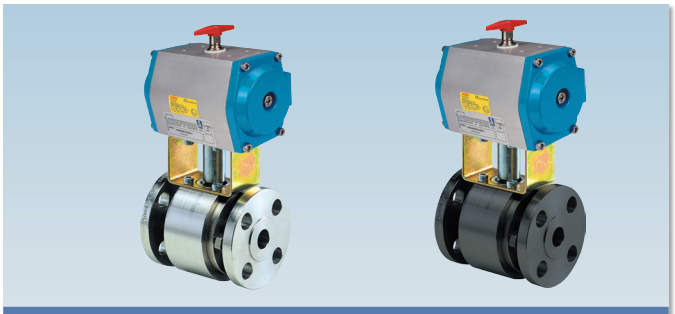

art. D21AA	AISI 316L Bar 1/2" - 8" - ANSI 150
art. D25AA	LF2 Bar 1/2" - 8" - ANSI 150
art. D27AA	AISI 316L Bar 1/2" - 8" - ANSI 300
art. D28AA	LF2 Bar 1/2" - 8" - ANSI 300
art. D29AA	AISI 316L Bar 1/2" - 4" - ANSI 600
art. D30AA	LF2 Bar 1/2" - 4" - ANSI 600

SINGLE ACTING

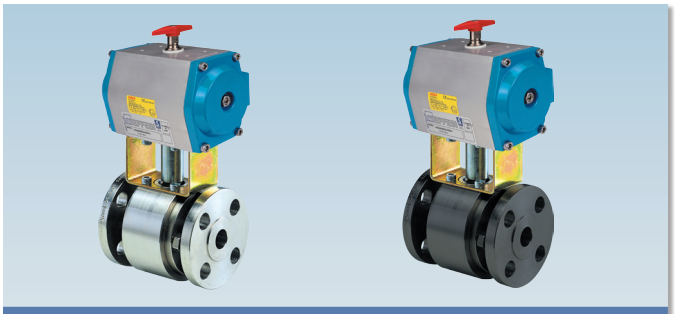

art. S21AA	AISI 316L Bar 1/2" - 8" - ANSI 150
art. S25AA	LF2 Bar 1/2" - 8" - ANSI 150
art. S27AA	AISI 316L Bar 1/2" - 8" - ANSI 300
art. S28AA	LF2 Bar 1/2" - 8" - ANSI 300
art. S29AA	AISI 316L Bar 1/2" - 4" - ANSI 600
art. S30AA	LF2 Bar 1/2" - 4" - ANSI 600

EFFEBI®

EFFEBI U.S. - 30 Chapin Rd, Suite 1205 - PINE BROOK, NJ 07058
Tel. +1 973-287-7584 - E-mail: effebi.us@effebi.com
Internet: www.effebi.com

ICIM UNI EN ISO 9001: 2015
ICIM ISO 14001:2015

ANTARES
ANSI

ACTUATOR FEATURES:
- **ROTATION ANGLE:** 90°.
- **TEMPERATURE LIMITS:** -4°F / +194°F.
- **MAXIMUM SUPPLY PRESSURE:** 145 Psi (116 Psi for DNA045).
- **NOMINAL PRESSURE:** 81.5 Psi.
- **SUPPLY FLUID:** filtered compressed air.
- **LUBRICATION:** NBR compatible oil to be used.
- Long regulation pin for the regulation from 0° up to 90° (on request)

For further information on the actuator technical features refer to the specific data sheet for actuator at the end of this catalogue.

STANDARD VALVE FEATURES:
- **STANDARDS:** BS EN ISO 17292
- **TEMPERATURE LIMITS:** -4°F / +356°F LF2 (PTFE) (P+Metal Care). -4°F / +356°F A316/A316L (PTFE) (P+Metal Care).
- **MAXIMUM WORKING PRESSURE:** ANSI 150 - ANSI 300 - ANSI 600.
- **CONNECTIONS with flanges:** flanges ANSI 150 RF - ANSI 300 RF - ANSI 600 RF - ANSI B16.5 face to face ANSI B16.10.

For general applications and special executions, see the manual valve.

DOUBLE ACTING								
SIZE inch.	WEIGHT Lbf	A	B	C	E	ACTUATOR	KIT	CLASS
1/2"	10.36	4.57	2.76	2.68	6.77	DNA045AZ00	K1GA0004	ANSI 150
3/4"	10.69	4.57	2.76	2.68	6.77	DNA045AZ00	K1GA0004	ANSI 150
1"	14.61	4.57	2.76	2.68	6.99	DNA045AZ00	K1GA1006	ANSI 150
1"1/4	21.43	5.24	3.07	2.91	8.27	DGA052AX00	K1GA0007	ANSI 150
1"1/2	26.92	5.39	3.50	3.46	9.27	DGA063AX00	K1GA1008	ANSI 150
2"	36.06	6.34	4.02	3.94	10.02	DGA075AX00	K1GA0008	ANSI 150
2"1/2	57.61	7.17	4.25	4.25	10.94	DGA083AX00	K1GA0010	ANSI 150
3"	73.05	8.23	4.72	4.61	11.69	DGA092AX00	K1GA0010	ANSI 150
4"	103.58	11.57	4.72	5.51	13.82	DNA118AX00	K1GA2012	ANSI 150
5"	161.60	14.96	6.77	7.80	16.85	DNA160AX00	K1GA0013	ANSI 150
6"	288.80	14.96	6.77	7.80	18.60	DNA160AX00	K1GA0014	ANSI 150
8"	519.81	18.43	8.82	10.04	22.80	DNA210AX00	K1GA0015	ANSI 150
1/2"	10.36	4.57	2.76	2.68	6.77	DNA045AZ00	K1GAQ004300	ANSI 300
3/4"	14.78	4.57	2.76	2.68	6.77	DNA045AZ00	K1GAQ005300	ANSI 300
1"	18.08	5.39	3.50	3.46	8.56	DGA063AX00	K1GAQ006300	ANSI 300
1"1/4	23.17	5.39	3.50	3.46	8.82	DGA063AX00	K1GAQ006300	ANSI 300
1"1/2	35.71	6.34	4.02	3.94	9.74	DGA075AX00	K1GAQ008300	ANSI 300
2"	43.11	7.09	4.25	4.25	10.33	DGA083AX00	K1GAQ008300	ANSI 300
2"1/2	67.96	7.09	4.25	4.25	10.94	DGA083AX00	K1GAQ010300	ANSI 300
3"	92.26	8.78	4.72	5.51	12.60	DNA110AX00	K1GAQ011300	ANSI 300
4"	149.15	11.57	4.72	5.51	14.61	DNA118AX00	K1GAQ012300	ANSI 300
6"	328.04	14.96	6.77	7.80	18.60	DNA160AX00	K1GAQ014300	ANSI 300
8"	584.66	18.43	8.82	10.04	22.80	DNA210AX00	K1GAQ015300	ANSI 300
1/2"	11.84	5.24	3.07	2.91	7	DGA052AX00	K1GAQ004600	ANSI 600
3/4"	19.27	5.39	3.50	3.46	9	DGA063AX00	K1GAQ005600	ANSI 600
1"	27.67	6.34	4.02	3.94	9	DGA075AX00	K1GAQ006600	ANSI 600
1"1/4	36.16	7.09	4.25	4.25	10	DGA083AX00	K1GAQ007600	ANSI 600
1"1/2	42.99	8.23	4.72	4.61	10	DGA092AX00	K1GAQ008600	ANSI 600
2"	71.43	8.78	4.72	5.51	12	DNA110AX00	K1GAQ009600	ANSI 600
2"1/2	100.53	11.57	4.72	5.51	13	DNA118AX00	K1GAQ010600	ANSI 600
3"	135.36	11.85	5.39	6.30	14	DNA127AX00	K1GAQ011600	ANSI 600
4"	281.53	13.27	6.77	7.80	18	DNA143AX00	K1GAQ012600	ANSI 600

ANTARES
ANSI

ACTUATOR FEATURES:
- **ROTATION ANGLE:** 90°.
- **TEMPERATURE LIMITS:** -4°F / +194°F.
- **MAXIMUM SUPPLY PRESSURE:** 145 Psi (116 Psi for DNA045).
- **NOMINAL PRESSURE:** 81.5 Psi.
- **SUPPLY FLUID:** filtered compressed air.
- **LUBRICATION:** NBR compatible oil to be used.
- Long regulation pin for the regulation from 0° up to 90° (on request)

For further information on the actuator technical features refer to the specific data sheet for actuator at the end of this catalogue.

STANDARD VALVE FEATURES:
- **STANDARDS:** BS EN ISO 17292
- **TEMPERATURE LIMITS:** -4°F / +356°F LF2 (PTFE) (P+Metal Care). -4°F / +356°F A316/A316L (PTFE) (P+Metal Care).
- **MAXIMUM WORKING PRESSURE:** ANSI 150 - ANSI 300 - ANSI 600.
- **CONNECTIONS with flanges:** flanges ANSI 150 RF - ANSI 300 RF - ANSI 600 RF - ANSI B16.5 face to face ANSI B16.10.

For general applications and special executions, see the manual valve.

SINGLE ACTING								
SIZE inch.	**WEIGHT Lbf**	**A**	**B**	**C**	**E**	**ACTUATOR**	**KIT**	**CLASS**
1/2"	10.58	4.57	2.76	2.68	6.77	SNA0453Z00	K1GA0604	ANSI 150
3/4"	11.57	5.24	3.07	2.91	7.80	SGA0524X00	K1GA0005	ANSI 150
1"	16.85	5.39	3.50	3.46	8.56	SGA0634X00	K1GA0106	ANSI 150
1"1/4	24.85	6.34	4.02	3.94	9.29	SGA0754X00	K1GA0107	ANSI 150
1"1/2	30.23	7.17	4.25	4.25	10.06	SGA0834X00	K1GA0108	ANSI 150
2"	40.24	8.23	4.72	4.61	10.69	SGA0924X00	K1GA0108	ANSI 150
2"1/2	70.39	11.57	4.72	5.51	12.99	SNA1184X00	K1GA0111	ANSI 150
3"	83.85	11.57	4.72	5.51	13.39	SNA1184X00	K1GA0111	ANSI 150
4"	111.52	11.85	5.39	6.30	14.61	SNA1274X00	K1GA0212	ANSI 150
5"	210.98	16.77	8.82	10.04	19.49	SNA1904X00	K1GA0113	ANSI 150
6"	338.63	18.43	8.82	10.04	21.24	SNA2104X00	K1GA0015	ANSI 150
8"	605.35	23.98	10.71	11.89	25.83	SNA2544X00	K1GA0115	ANSI 150
1/2"	12.61	5.39	3.50	3.46	7.56	SGA0634X00	K1GAQ104300	ANSI 300
3/4"	17.03	5.39	3.50	3.46	8.35	SGA0634X00	K1GAQ105300	ANSI 300
1"	20.28	6.34	4.02	3.94	9.04	SGA0754X00	K1GAQ106300	ANSI 300
1"1/4	26.48	7.09	4.25	4.25	9.61	SGA0834X00	K1GAQ106300	ANSI 300
1"1/2	37.59	7.09	4.25	4.25	10.06	SGA0834X00	K1GAQ008300	ANSI 300
2"	46.42	8.23	4.72	4.61	10.69	SGA0925X00	K1GAQ008300	ANSI 300
2"1/2	76.11	8.78	4.72	5.51	12.20	SNA1104X00	K1GAQ011300	ANSI 300
3"	104.39	11.85	5.39	6.30	14.17	SNA1274X00	K1GAQ011300	ANSI 300
4"	168.33	13.27	6.77	6.30	15.39	SNA1435XDR	K1GAQ112300	ANSI 300
6"	377.87	18.43	8.82	5.31	16.12	SNA2105X00	K1GAQ114300	ANSI 300
8"	654.33	23.98	10.71	6.26	20.20	SNA2545X00	K1GAQ115300	ANSI 300
1/2"	15.26	6.34	4.02	3.94	9	SGA0754X00	K1GAQ104600	ANSI 600
3/4"	21.47	6.34	4.02	3.94	9	SGA0754X00	K1GAQ105600	ANSI 600
1"	28.44	6.34	4.02	3.94	9	SGA0754X00	K1GAQ006600	ANSI 600
1"1/4	44.31	8.78	4.72	5.51	11	SNA1104X00	K1GAQ107600	ANSI 600
1"1/2	53.79	11.57	4.72	5.51	11	SNA1184X00	K1GAQ108600	ANSI 600
2"	83.55	11.85	5.39	6.30	13	SNA1274X00	K1GAQ009600	ANSI 600
2"1/2	119.71	13.27	6.77	7.80	16	SNA1434X00	K1GAQ110600	ANSI 600
3"	159.83	14.96	6.77	7.80	17	SNA1605X00	K1GAQ111600	ANSI 600
4"	339.73	16.77	8.82	10.04	22	SNA1905X00	K1GAQ112600	ANSI 600

ANTARES
ANSI

EFFEBI

SECTION

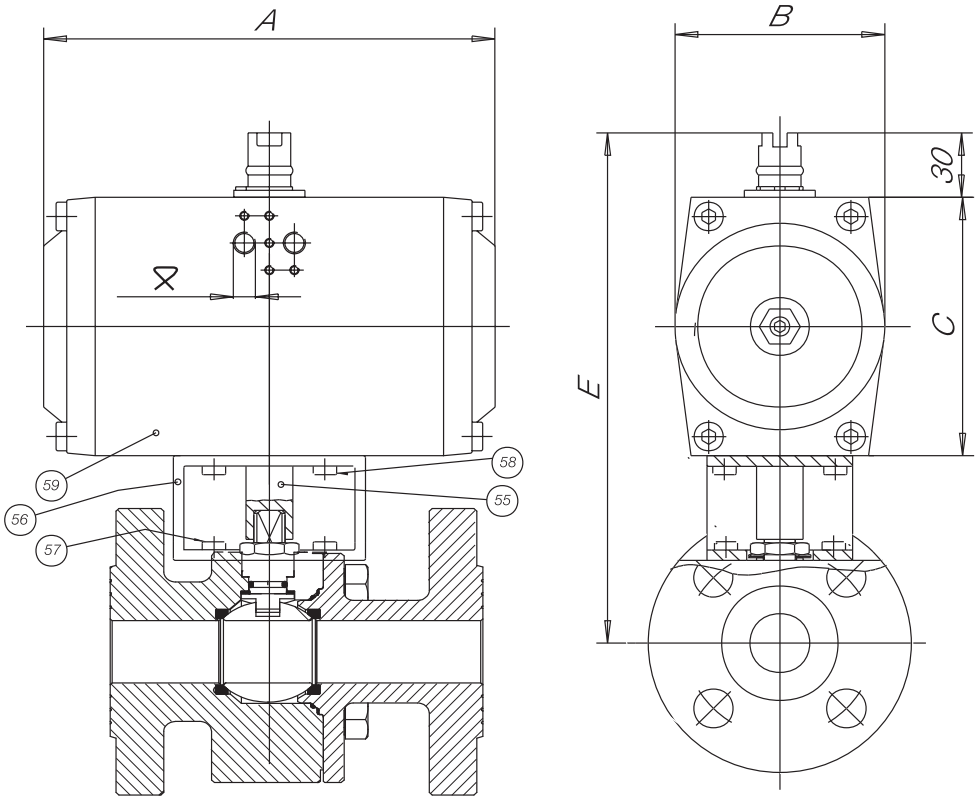

⧖ Up to size 092= 1/8"G
110÷190=1/4"G

LIST OF COMPONENTS AND MATERIALS			
55	ACTUATOR PIN	1	C.S. ZINC.
56	BRACKET	1	C.S. ZINC.
57	BRACKET/VALVE SCREW	4	8.8 ZINC.
58	BRACKET/ACTUATOR SCREW	4	8.8 ZINC.
59	ACTUATOR	1	AL. ANODIZED