ANTARES ANSI WITH ELECTRIC ACTUATOR

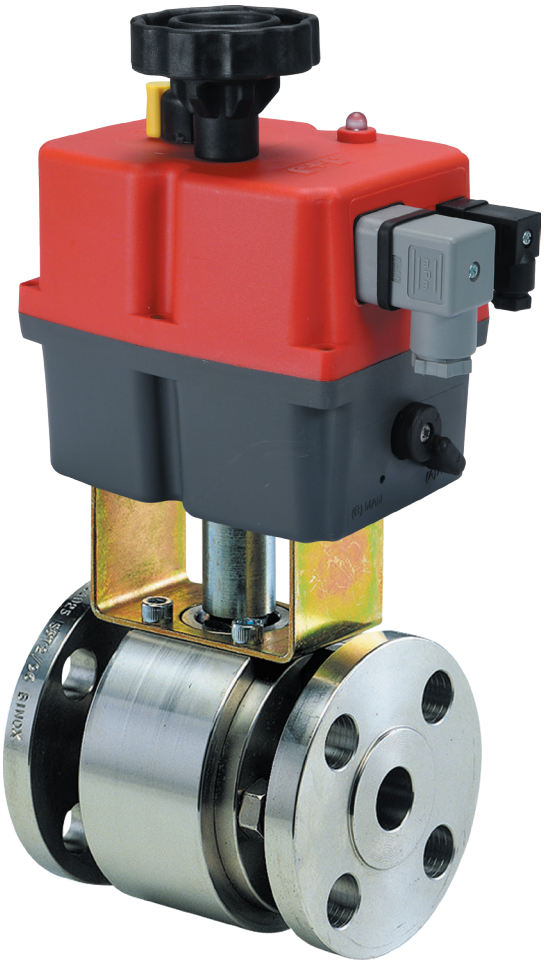

FUGITIVE EMISSIONS
TEST CERTIFICATE
UNI EN ISO 15848-1:2017

E4C 24-240 V AC/DC

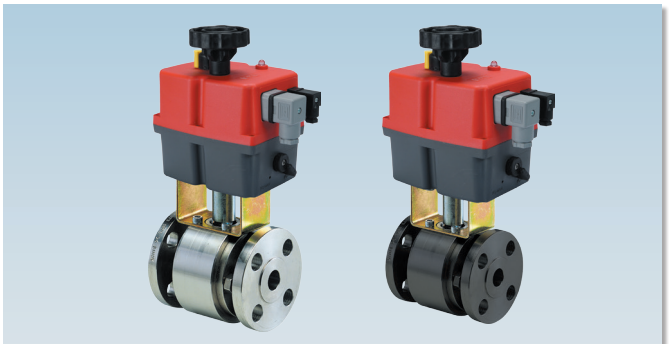

art. E21AA...	AISI 316L Bar 1/2" - 4" 2" and 3" (also from casting) ANSI 150
art. E25AA...	LF2 Bar 1/2" - 4" ANSI 150
art. E27AA...	AISI 316L Bar 1/2" - 4" ANSI 300
art. E28AA...	LF2 Bar 1/2" - 4" ANSI 300
art. E29AA...	AISI 316L Bar 1/2" - 3" ANSI 600
art. E30AA...	LF2 Bar 1/2" - 3" ANSI 600

EQ 24-115-230-400 V (on request)

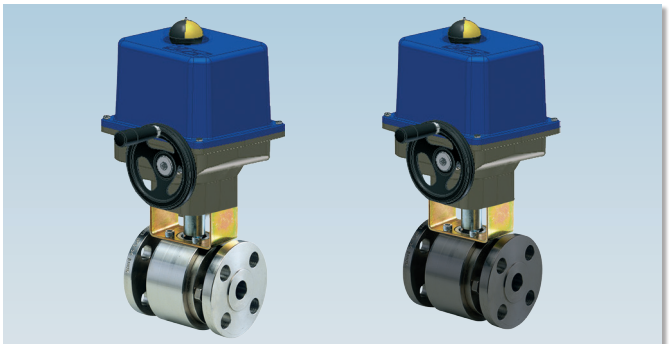

art. E21AA...	AISI 316L Bar 5" - 8" 6" (also from casting) ANSI 150
art. E25AA...	LF2 Bar 5" - 8" ANSI 150
art. E27AA...	AISI 316L Bar 5" - 8" ANSI 300
art. E28AA...	LF2 Bar 5" - 8" ANSI 300
art. E29AA...	AISI 316L Bar 4" ANSI 600
art. E30AA...	LF2 Bar 4" ANSI 600

EFFEBI®

UNI EN ISO 9001: 2015

EFFEBI U.S. - 30 Chapin Rd, Suite 1205 - PINE BROOK, NJ 07058
Tel. +1 973-287-7584 - E-mail: effebi.us@effebi.com
Internet: www.effebi.com

ISO 14001:2015

ANTARES
ANSI WITH ELECTRIC ACTUATOR

E4C ACTUATOR FEATURES:
- **ROTATION ANGLE:** 90°.
- **TEMPERATURE LIMITS:** -4°F / +158°F.
- **SUPPLY VOLTAGE:** 24-240 VAC / DC 50 - 60 HZ.
- **PROTECTION DEGREE:** IP67.
- **STATIC TORQUE SUPPLIED:** 177 Lbf/inch. - 3097 Lbf/inch.
- **ROTATION TIME:** 10 s. - 48 s.
- On Request is Available 12 V AC-DC 50 / 60 HZ

EQ ACTUATOR FEATURES:
- **ROTATION ANGLE:** 90°.
- **TEMPERATURE LIMITS:** -4°F / +176°F.
- **SUPPLY VOLTAGE:** 24-115-230-400 V.
- **PROTECTION DEGREE:** IP67.
- **STATIC TORQUE SUPPLIED:** 4425 Lbf/inch. – 13275 Lbf/inch.
- **ROTATION TIME:** 29 sec. – 93 sec.

STANDARD VALVE FEATURES:
For general features and special versions refer to data on the manual valve. For further information on the actuator technical features refer to the specific data sheet for actuator at the end of this catalogue.
E4C • ER-E EQ

ANTARES ANSI 150 + ELECTRIC ACTUATOR

SIZE inch.	WEIGHT Lbf	A	B	C	E	ACTUATOR	KIT FOR ACTUATOR
1/2"	13	7.13	4.33	6.65	8.78	E4C20	K1GA0004
3/4"	13.3	7.13	4.33	6.65	8.78	E4C20	K1GA0004
1"	17.2	7.13	4.33	6.65	9.41	E4C20	K1GA1006
1" 1/4	23.4	7.13	4.33	6.65	9.69	E4C20	K1GA0007
1" 1/2	27.9	7.13	4.33	6.65	10.98	E4C35	K1GA1008
2"	36.7	7.13	4.33	7.72	12.20	E4C55	K1GA0008
2" 1/2	58.7	7.13	4.33	7.72	13.19	E4C85	K1GA0010
3"	77	9.25	8.43	10.00	15.87	E4C14	K1GA0010
4"	99.3	9.25	8.43	10.00	17.83	E4C30	K1GA2012
5"	184.9	12.72	11.30	15.98	24.02	EQ503	K1GA0013
6"	312.1	12.72	11.30	15.98	26.77	EQ703	K1GA0014
8"	509.2	13.70	10.83	16.10	27.36	EQ1003	K1GA0015

ANTARES ANSI 300 + ELECTRIC ACTUATOR

SIZE inch.	WEIGHT Lbf	A	B	C	E	ACTUATOR	KIT FOR ACTUATOR
1/2"	13	7.13	4.33	6.65	9.57	E4C20	K1GAQ004300
3/4"	17.4	7.13	4.33	6.65	9.57	E4C20	K1GAQ005300
1"	19.1	7.13	4.33	6.65	10.57	E4C35	K1GAQ006300
1" 1/4	25.2	7.13	4.33	7.72	11.89	E4C55	K1GAQ006300
1" 1/2	36.3	7.13	4.33	7.72	12.34	E4C55	K1GAQ008300
2"	42.8	7.13	4.33	7.72	12.62	E4C55	K1GAQ008300
2" 1/2	69.1	7.13	4.33	7.72	13.23	E4C85	K1GAQ010300
3"	92.2	9.25	8.43	10.00	15.91	E4C14	K1GAQ011300
4"	144.9	9.25	8.43	10.00	17.91	E4C30	K1GAQ012300
6"	351.4	12.72	11.30	15.98	25.61	EQ703	K1GAQ014300
8"	558.2	13.70	10.83	16.10	27.68	EQ1503	K1GAQ015300

ANTARES ANSI 600 + ELECTRIC ACTUATOR

SIZE inch.	WEIGHT Lbf	A	B	C	E	ACTUATOR	KIT FOR ACTUATOR
1/2"	13.8	7.13	4.33	6.65	9.67	E4C20	K1GAQ004600
3/4"	20.2	7.13	4.33	6.65	10.65	E4C35	K1GAQ005600
1"	28.3	7.13	4.33	7.72	11.63	E4C55	K1GAQ006600
1" 1/4	37.2	7.13	4.33	7.72	12.19	E4C85	K1GAQ007600
1" 1/2	42.1	7.13	4.33	7.72	12.34	E4C85	K1GAQ008600
2"	71.4	9.25	8.43	10.00	15.37	E4C14	K1GAQ009600
2" 1/2	96.3	9.25	8.43	10.00	15.83	E4C30	K1GAQ010600
3"	126.9	9.25	8.43	10.00	16.95	E4C30	K1GAQ011600
4"	313.7	12.72	11.30	15.98	24.78	EQ503	K1GAQ012600

On request: EQ actuator is available for valves of all dimensions in 24-115-230-400 voltage.

E4C ELECTRIC ACTUATOR

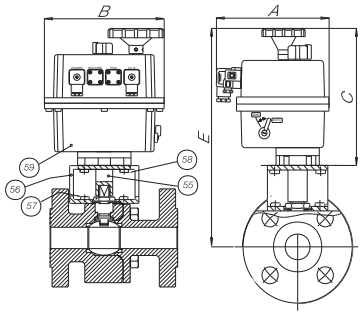

EQ ELECTRIC ACTUATOR

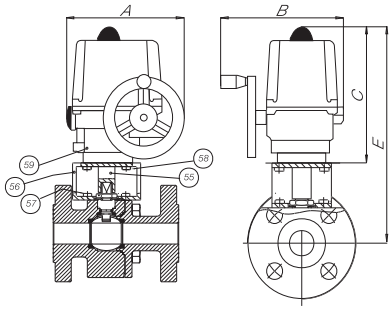

LIST OF COMPONENTS AND MATERIALS

55	ACTUATOR PIN	1	C.S. ZINC.
56	BRACKET	1	C.S. ZINC.
57	BRACKET/VALVE SCREW	4	8.8 ZINC.
58	BRACKET/ACTUATOR SCREW	4	8.8 ZINC.
59	ACTUATOR **E4C**	1	POLYAMIDE
59	ACTUATOR **EQ**	1	ALLUMINIUM