ANTARES ANSI

MADE IN ITALY

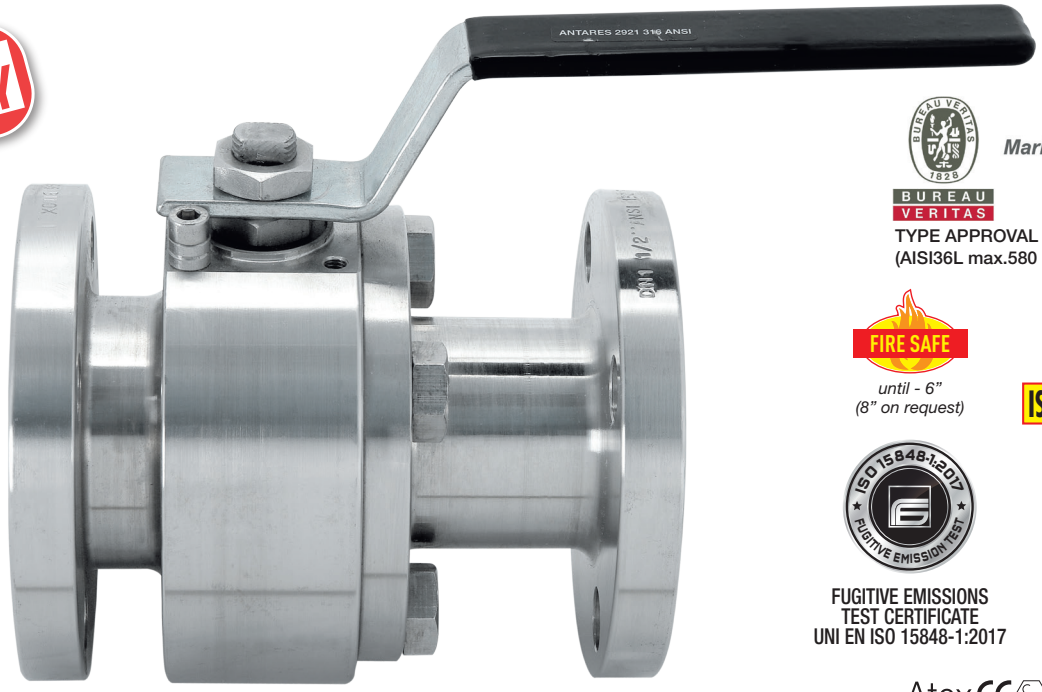

Marine & Offshore

BUREAU VERITAS

TYPE APPROVAL CERTIFICATE
(AISI36L max.580 PSI CWP)

FIRE SAFE
until - 6"
(8" on request)

FIRE SAFE
ISO 10497:2010 *

ISO 15848-1:2017 FUGITIVE EMISSION TEST

FUGITIVE EMISSIONS
TEST CERTIFICATE
UNI EN ISO 15848-1:2017

TÜV KNOW-HOW CLUB TÜV Hessen PROFI Member

SIL (IEC 61508)
ONLY ANTARES
ANSI 150/ANSI 300

Atex CE Ex II 2 G D*
* *on request*

art. 2921	**AISI 316L ANSI 150 FROM BAR** from 1/2" to 8" **

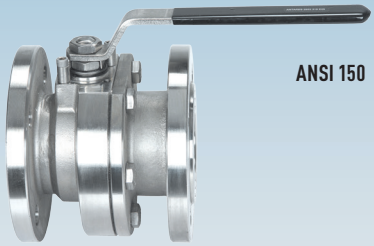

ANSI 150

art. 2921...F	**AISI 316 ANSI 150 FROM CASTING** from 2" - 3" - 6"
art. 2921	**AISI 316L ANSI 150 FROM BAR** ** from 1/2" to 8"
art. 2931	**LF2 ANSI 150 FROM BAR** from 1/2" to 8"
art. 2984	**AISI 304 ANSI 150 FROM BAR** from 1/2" to 8"



ANSI 300

art. 2923	**AISI 316L ANSI 300 FROM BAR** ** from 1/2" to 8"
art. 2933	**LF2 ANSI 300 FROM BAR** from 1/2" to 8"



ANSI 600

art. 2927	**AISI 316L ANSI 600 FROM BAR** ** from 1/2" to 4"
art. 2937	**LF2 ANSI 600 FROM BAR** from 1/2" to 4"

MAIN STANDARD FEATURES:

- **CONSTRUCTION:** AISI 316L (from bar) **
  A351-CF8M (AISI316) (from casting)
  AISI 304L (from bar)
  ASTM A350 LF2 (from bar)
- **STANDARDS:** BS EN ISO 17292:2004.
- **CERTIFICATION:** FIRE SAFE according to BS 6755 - API 6 FA - API 607 (until DN150)
  On request: ANSI/API STD 607 ISO 10497:2010 (DN15÷DN200)
  (only ANSI 150 - ANSI 300)
  Fugitive Emission UNI EN ISO 15848-1:2017
  only PTFE ANSI 150/ANSI 300 Up to DN40 for ANSI 600
  Up to SIL3 IEC61508 (only Antares ANSI 150 and ANSI 300)
  (NACE MR 0.175 from bar on request).
- **SIZE RANGE:** 1/2" - 8" (ANSI 150)
  1/2" - 8" (ANSI 300)
  1/2" - 4" (ANSI 600)
- **PRESSURES:** ANSI 150 - ANSI 300 - ANSI 600
- **TEMPERATURE LIMITS:** -4°F / +356°F A316/A316L (PTFE)
  -4°F / +356°F LF2 (PTFE)
  -4°F / +356°F AISI 304 (PTFE).
- **CONNECTIONS with flanges:** flanges ANSI 150 RF - ANSI 300 RF - ANSI 600 RF - (ANSI B16.5) (face to face ANSI B16.10).
- **STEM:** Anti blow out with anti-static device.
- **ANTISTATIC DEVICE:** starting from DN25 (DN15 – DN20 upon request).
- **PACKING:** triple patented stem-packing with labyrinth effect and automatic adjustment by Belleville washers.
- **UPPER CONNECTION:** ISO 5211.
- **OPERATOR:** lever. Available colours: black, yellow.

EFFEBI®

EFFEBI U.S. - 30 Chapin Rd, Suite 1205 - PINE BROOK, NJ 07058
Tel. +1 973-287-7584 - E-mail: effebi.us@effebi.com
Internet: www.effebi.com

ICIM UNI EN ISO 9001: 2015
ICIM ISO 14001:2015

ANTARES
ANSI

GENERAL APPLICATIONS:
ON-OFF valve for: chemical products, petrochemical plants, water plants, distribution lines for gas, air, water. Suitable for Vacuum (not high vacuum), steam up to +392°F with PTFE+CARBOGRAPHITE. For special application please check the suitability of the valve for the process and the required corrosion resistancy using the relevant table.

SPECIAL EXECUTIONS:
- **PTFE + CARBOGRAPHITE:** Use up to +392°F (optimum from 140°F to 392°F).
- Peek for high temperature +482°F (optimum from 176°F to 482°F)
- PTFE seals with metal core (on request).
- Ball with relief hole.
- Stem and ball in Aisi316L (up to DN100) .
- Degreased valves for oxygen service (only AISI316L) – max. 290 Psi.
- For further special requests please consult our technical/ commercial service.
- **Nace MR 0.175 from Bar on request.**

CONSTRUCTION

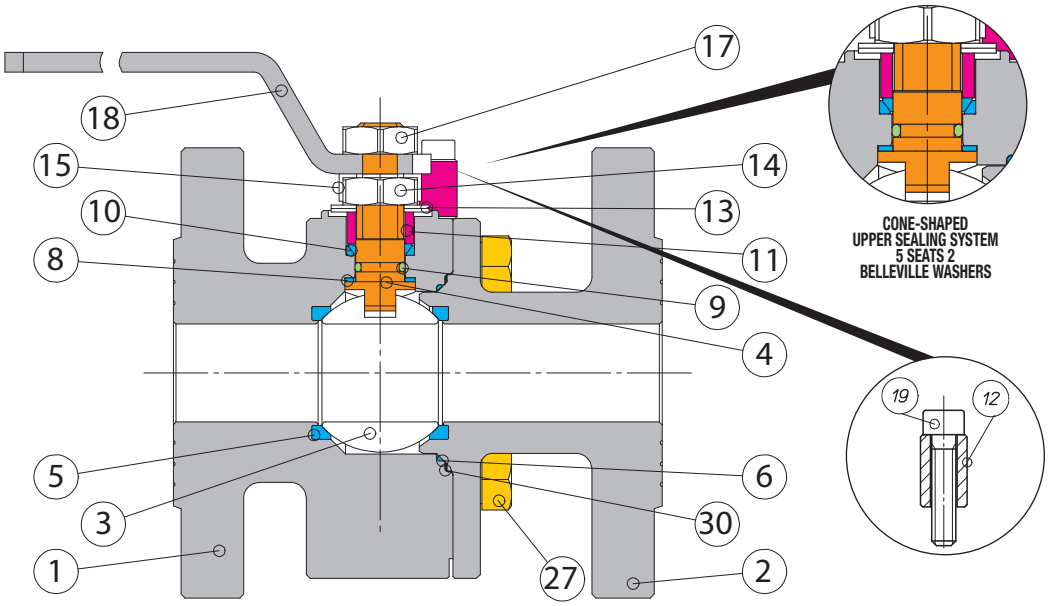

LIST OF COMPONENTS AND MATERIALS

			AISI 316 Casting	AISI 316L ** Bar	ASTM A350 LF2 Bar	AISI 304 Bar	N°
1		BODY	AISI 316 Casting	AISI 316L	ASTM A350 LF2	AISI 304	1
2		FLANGE	AISI 316 Casting	AISI 316L	ASTM A350 LF2	AISI 304	1
3		BALL	AISI 316	AISI 316	*** AISI 304 - AISI 316	*** AISI 304 - AISI 316	1
4	●	STEM	AISI 316	AISI 316	AISI 304	AISI 304	1
5	●	SEAT	PTFE	PTFE/PTFE + METAL CORE	PTFE/PTFE + METAL CORE	PTFE/PTFE + METAL CORE	2
6	●	SIDE SEALING RING	PTFE	PTFE	PTFE	PTFE	1
8	●	UPPER SEALING RING	PTFE	PTFE	PTFE	PTFE	2
9	●	STEM O-RING	VITON	VITON	VITON	VITON	1
10	●	UPPER SEALING COUPLE	PTFE	PTFE	PTFE	PTFE	1
11	●	GLAND WASHER	AISI 304	AISI 304	AISI 304	AISI 304	1
12	●	STOP	AISI 304	AISI 304	C.S.	AISI 304	1
13		BELLEVILLE WASHERS	AISI 301	AISI 301	50CrV4	AISI 301	2
14		STEM RETAINING NUT	AISI 304	AISI 304	C.S.	AISI 304	1
15		FIXING NUT PLATE	AISI 304	AISI 304	AISI 304	AISI 304	1
17		LOCKING NUT	AISI 304	AISI 304	C.S.	AISI 304	1
18		LEVER	AISI 304	AISI 304	C.S.	AISI 304	1
19		STOP SCREW	AISI 304	AISI 304	C.S.	AISI 304	1
27		FLANGE LOCKING SCREW	AISI 304	AISI 304	AISI 304	AISI 304	1
30	●	EXTERNAL SIDE SEALING RING	PURE GRAPHITE	PURE GRAPHITE	PURE GRAPHITE	PURE GRAPHITE	1

- Internal stop from DN15 to DN20
- External stop from DN25 to DN100

*** DN15 - DN20 AISI 316
DN25 - DN100 AISI 304

ANTARES
ANSI

EFFEBI

SECTION

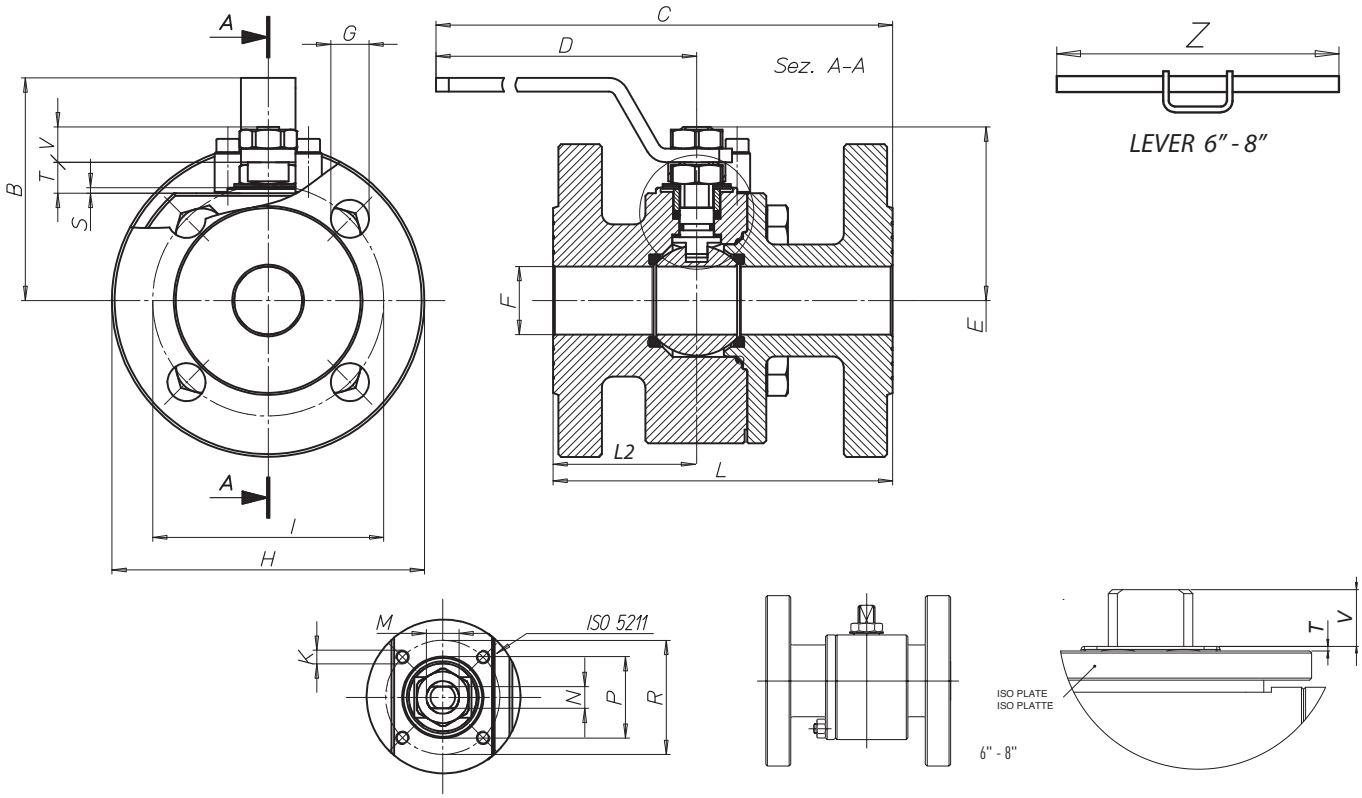

ANSI 150

SIZE	B	C	D	E	F	G	H	K	I	L short pattern	L long. pattern	M	N	P	R	S	T	V	Z	HOLES	ATT. ISO	WEIGHT Lbf.
1/2"	2.59	7.85	5.50	1.88	0.59	0.63	3.50	M5	2.38	4.25		M10	0.24	-	1.41	-	0.20	0.35	-	4	F03	7.9
3/4"	2.71	8.13	5.50	2	0.79	0.63	3.87	M5	2.75	4.62		M10	0.24	0.98	1.41	0.08	0.31	0.35	-	4	F03	8.2
1"	3.22	9.97	7.07	2.49	0.98	0.63	4.24	M5	3.12	5.00		M12	0.31	1.18	1.65	0.08	0.43	0.51	-	4	F04	12.1
1"1/4	3.42	10.49	7.07	2.67	1.26	0.63	4.61	M5	3.49	5.50		M12	0.31	1.18	1.65	0.08	0.37	0.49	-	4	F04	18.3
1"1/2	4.24	13.23	9.03	3.44	1.57	0.63	4.99	M6	3.86	6.50		M16	0.39	1.37	1.96	0.10	0.57	0.61	-	4	F05	22.6
2"	4.52	13.55	9.03	3.71	1.94	0.75	5.89	M6	4.74	7.00		M16	0.39	1.37	1.96	0.10	0.57	0.61	-	4	F05	30.3
2"1/2	5.46	17.20	12.57	4.81	2.55	0.75	6.99	M8	5.49	7.50		M22	0.55	2.16	2.75	0.12	0.75	0.92	-	4	F07	50.9
3"	5.89	17.59	12.57	5.20	3.06	0.75	7.48	M8	5.98	8.00		M22	0.55	2.16	2.75	0.12	0.75	0.92	-	4	F07	64.4
4"	6.40	20.54	14.53	5.83	3.77	0.75	8.99	M10	7.48	9.00		M22	0.63	-	4.01	-	0.06	1.02	-	8	F10	86.8
5"	7.11	20.54	14.53	6.54	4.63	0.86	9.97	M10	8.48	10.00		M27	0.63	2.75	4.01	0.12	0.82	1.02	-	8	F10	124.3
6"	9.78	32.01	22.93	7.85	5.65	0.86	11	M12	9.48		15.50	M42	1.02	-	4.91	-	0.10	1.28	25.53	8	F12	251.5
8"	11.31	33.03	22.93	9.23	7.54	0.86	13.47	M12	11.72		18.00	M42	1.02	-	4.91	-	0.10	1.10	25.53	8	F12	448.6

ANSI 300

SIZE	B	C	D	E	F	G	H	K	I	L short pattern	L2	M	N	P	R	S	T	V	Z	HOLES	ATT. ISO	WEIGHT Lbf.
1/2"	2.59	9.11	5.50	1.88	0.59	0.63	3.73	M5	2.62	5.50	1.88	M10	0.24	-	1.41	-	0.20	0.35	-	4	F03	7.9
3/4"	2.71	9.47	5.50	2	0.79	0.55	4.61	M5	3.24	6.00	1.96	M10	0.24	0.98	1.41	0.08	0.31	0.35	-	4	F03	12.4
1"	3.22	11.47	7.07	2.49	0.98	0.75	4.91	M5	3.49	6.50	2.08	M12	0.31	1.18	1.65	0.08	0.43	0.51	-	4	F04	13.7
1"1/4	3.42	11.91	7.07	2.67	1.26	0.75	5.22	M5	3.86	7.00	2.14	M12	0.31	1.18	1.65	0.08	0.37	0.49	-	4	F04	18.8
1"1/2	4.24	13.12	9.03	3.44	1.57	0.86	6.09	M6	4.49	7.50	3.27	M16	0.39	1.37	1.96	0.10	0.57	0.61	-	4	F05	29.9
2"	4.52	14.96	9.03	3.71	1.94	0.75	6.48	M6	4.99	8.50	2.55	M16	0.39	1.37	1.96	0.10	0.57	0.61	-	8	F05	36.5
2"1/2	5.46	19.06	12.57	4.81	2.55	0.86	7.50	M8	5.86	9.50	2.97	M22	0.55	2.16	2.75	0.12	0.75	0.92	-	8	F07	61.3
3"	5.89	20.56	12.57	5.20	3.06	0.86	8.25	M8	6.61	11.12	3.12	M22	0.55	2.16	2.75	0.12	0.75	0.92	-	8	F07	79.7
4"	6.40	21.95	14.53	5.83	3.77	0.86	9.97	M10	7.85	12.00	4.52	M27	0.63	-	4.01	-	0.06	1.02	-	8	F10	132.4
6"	9.50	31.49	22.38	7.85	5.65	0.86	12.57	M12	10.60	15.88	6.74	M42	1.02	-	4.91	-	0.10	1.30	25.53	12	F12	290.7
8"	11.07	30.71	22.38	9.23	7.54	1.02	14.92	M12	12.97	16.50	8.15	M42	1.02	-	4.91	-	0.10	1.12	25.53	12	F12	497.5

ANTARES
ANSI

EFFEBI

ANSI 600																			
SIZE	B	C	D	E	F	G	H	K	I	L long. pattern	L2	M	N	R	T +/-1	V +/-0.5	Z	HOLES	ATT. ISO	WEIGHT Lbf.
1/2"	2.59	9.23	5.50	1.88	0.59	0.63	3.73	M5	2.62	6.50	2.76	M10	0.24	1.41	0.09	0.36	-	4	F03	8.7
3/4"	2.95	11.39	7.07	2.20	0.79	0.75	4.52	M5	3.24	7.50	3.15	M12	0.31	1.65	0.08	0.49	-	4	F04	14.9
1"	3.22	11.90	7.07	2.49	0.98	0.75	4.91	M5	3.49	8.50	3.68	M12	0.31	1.65	0.43	0.51	-	4	F04	21.9
1"1/4	4.08	14.33	9.03	3.28	1.26	0.75	5.22	M6	3.86	9.00	3.71	M16	0.39	1.96	0.57	0.61	-	4	F05	29.5
1"1/2	4.24	14.53	9.03	3.44	1.57	0.86	5.30	M6	4.49	9.50	4.00	M16	0.39	1.96	0.57	0.61	-	4	F05	34.3
2"	5.03	19.95	13.08	4.34	1.94	0.75	6.48	M8	4.99	11.50	4.61	M22	0.55	2.75	0.43	0.90	-	8	F07	58.8
2"1/2	5.50	20.62	13.08	4.81	2.55	0.86	7.46	M8	5.86	13.00	5.42	M22	0.55	2.75	0.45	0.90	-	8	F07	83.7
3"	6.20	23.17	14.53	5.60	3.06	0.86	8.25	M10	6.61	14.00	5.40	M27	0.63	4.01	0.06	0.96	-	8	F10	114.4
4"	8.68	33.03	22.93	6.83	3.77	1.00	10.80	M12	8.48	17.00	6.28	M42	1.02	4.91	0.10	1.10	25.53	8	F12	253.1

BREAKAWAY TORQUES in Lbf/inch.

	DN size	1/2"	3/4"	1"	1"1/4	1"1/2	2"	2"1/2	3"	4"	5"	6"	8"
psi	0	35.4	61.9	132.7	185.8	230.1	318.6	451.3	716.8	1150.5	2124	2743.5	5310
	ANSI150	44.2	70.8	150.4	203.5	247.8	345.1	477.9	761.1	1486.8	2655	3540	7080
	ANSI300	70.8	106.2	221.2	283.2	318.6	442.5	592.9	1106.2	1770	3274.5	4425	8850
	ANSI 600	106.2	185.8	398.2	531	619.5	885	1239	1947	3274.5			

The values in Lbf/inch. may vary depending on the seat material, temperature and type of fluid. For reliable operation of various types of actuators, in different working conditions, is recommended a safety factor of 1.5 (for PTFE).

PRESSURE/TEMPERATURE DIAGRAM

PTFE + METAL CORE
PTFE

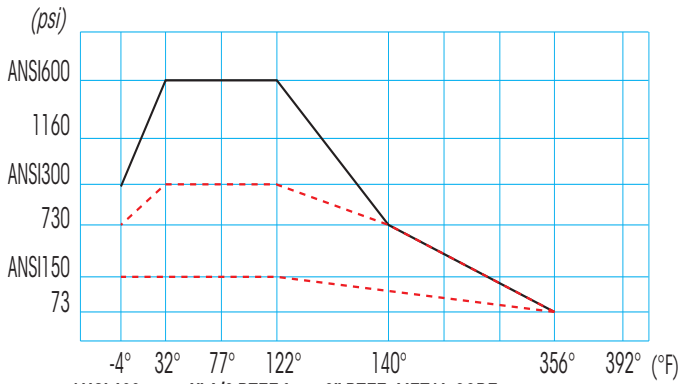

ANSI 600 up to 1" 1/2 PTFE from 2" PTFE+METAL CORE

PTFE + CARBOGRAPHITE

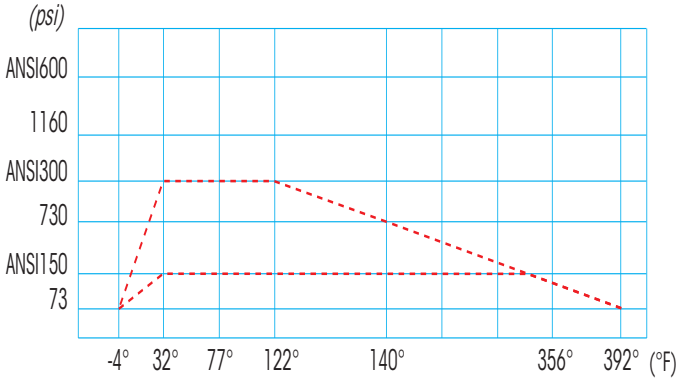

PEEK

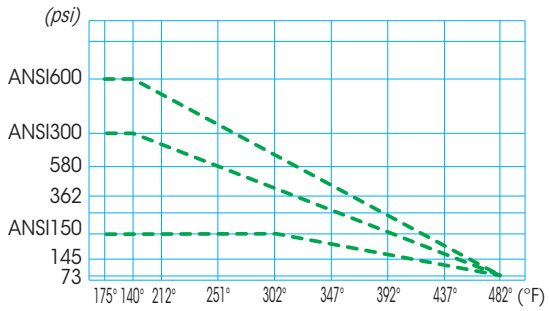

For Specifications about the Pressure-temperature Diagram and installation instructions - Consult our technical/commercial service