ALBA



See Pressure-temperature Diagram
1500 Psi

ISO 15848-1:2017
FUGITIVE EMISSION TEST

FUGITIVE EMISSIONS
TEST CERTIFICATE
UNI EN ISO 15848-1:2017
ONLY PTFE up to 2"

TÜV KNOW-HOW CLUB
TÜV Hessen PROFI Member

SIL (IEC 61508)

Atex CE Ex II 2 G D*

*Available on request (from 3/4" to 2")

art. 2601	F / F 1/4" - 2"



art. 2611	F/F 1/4" - 1"

MAIN STANDARD FEATURES:
- **CONSTRUCTION:** A351 - CF8M (AISI 316).
- **CERTIFICATION:** Fugitive Emission Test Certificate UNI EN ISO 15848-1:2017 Up to Sil3 IEC 61508
- **CONNECTIONS:** F/F NPT ANSI B1.20.1
- **PRESSURES:** 1500 PSI- 680 PSI.
- **TEMPERATURE LIMITS:** -4°F / +122°F.
- **STEM:** Anti blow out.
- **UPPER SEAL:** TRIPLE stem-packing with labyrinth effect and automatic adjustment by Belleville washers.
- **OPERATOR:** lever. Available colours: black, yellow.
- **TESTED FOR VACUUM:** (11.6 PSI).

GENERAL APPLICATIONS:
ON-OFF valve for: chemical products, for water and pneumatic installations, gas, water, vacuum. For steam applications, working pressures may be reduced and special seals required.
For special applications please check the suitability of the valve for the process and the required corrosion resistancy using the relevant table.

SPECIAL EXECUTIONS:
- **PTFE +15% GLASS FIBER:** -4°F + 347°F.
- **PTFE+CARBOGRAPHITE:** -4°F + 356°F, (optimum from 140°F to 356°F).
- **PE HD:** -4°F + 158°F
- Ball with relief hole.
- **DEGREASED VALVES:** For oxygen service (max W.P. 145 PSI).
- **STEM EXTENSION:** 1.96" heigh up to 2".
- For further special requests please consult our technical/ commercial service.

ON REQUEST:
2"1/2 - 3": with locking device and mounting plate ISO 5211.

EFFEBI®

EFFEBI U.S. - 30 Chapin Rd, Suite 1205 - PINE BROOK, NJ 07058
Tel. +1 973-287-7584 - E-mail: effebi.us@effebi.com
Internet: www.effebi.com

ICIM UNI EN ISO 9001: 2015
ICIM ISO 14001:2015

ALBA

CONSTRUCTION

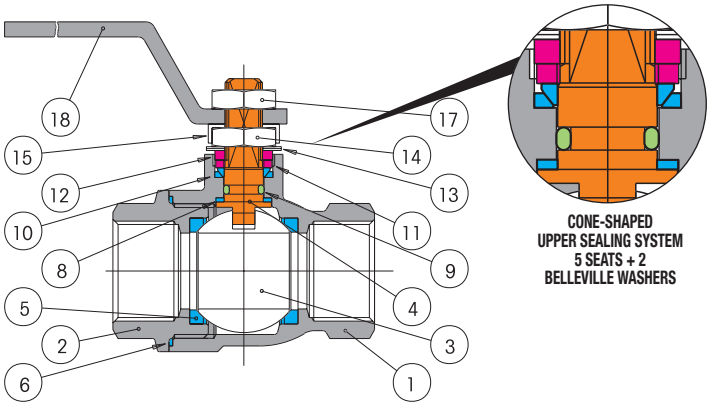

CONE-SHAPED
UPPER SEALING SYSTEM
5 SEATS + 2
BELLEVILLE WASHERS

LIST OF COMPONENTS AND MATERIALS

1		BODY	AISI 316	1.4408	1
2		FEMALE END	AISI 316	1.4408	1
3		BALL	AISI 316	1.4401	1
4		STEM	AISI 316	1.4401	1
5		SEAT	PTFE	-	2
6		SIDE SEALING RING	PTFE	-	1
8		UPPER SEALING RING	PTFE	-	2
9		STEM O-RING	VITON	-	1
10		UPPER SEALING COUPLE	PTFE	-	1
11		GLAND WASHER	AISI 304	1.4301	1
12		STOP	AISI 304	1.4301	1
13		BELLEVILLE WASHERS	AISI 301	1.4310	2
14		STEM RETAINING NUT	AISI 304	1.4301	1
15		FIXING NUT PLATE	AISI 304	1.4301	1
17		LOCKING NUT	AISI 304	1.4301	1
18		LEVER	AISI 304	1.4301	1

SECTION

1/4" ÷ 2"

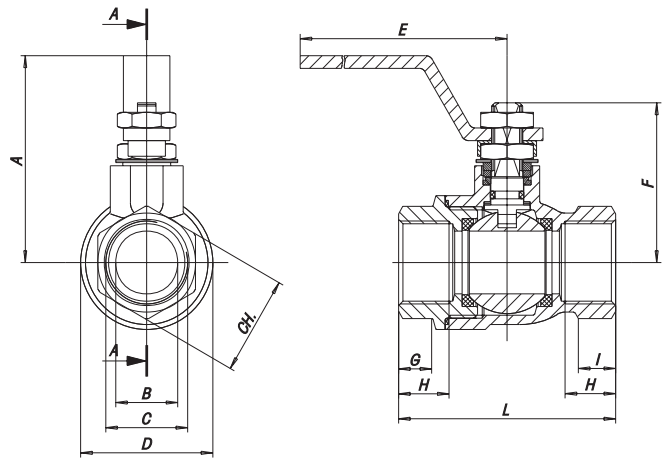

2"1/2 ÷ 3"

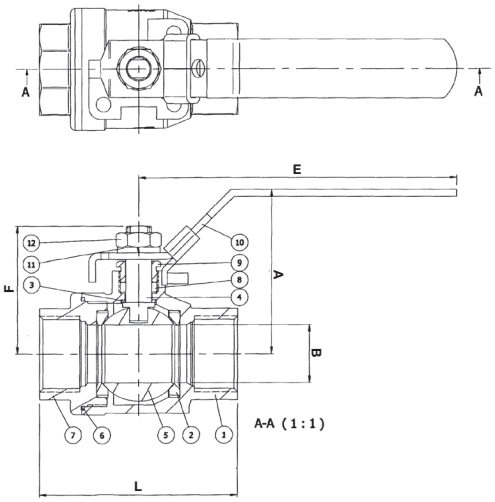

SIZE	A	B	D	E	F	G	H	I	L	HEX.KEY	OCT. KEY	WEIGHT lbf MF	WEIGHT lbf FF	CV
1/4"	2.04	0.31	1.14	4.33	1.45	0.33	0.44	0.31	2.16	0.84	-	0.50	0.48	12.7
3/8"	2.04	0.39	1.14	4.33	1.45	0.33	0.44	0.31	2.16	0.84	-	0.50	0.45	12.7
1/2"	2.16	0.59	1.33	4.33	1.65	0.39	0.59	0.37	2.55	1.04	-	0.69	0.60	23.2
3/4"	2.59	0.78	1.67	5.51	2.04	0.45	0.64	0.45	2.75	1.24	-	1.17	1.02	69.6
1"	2.75	0.98	1.98	5.51	2.20	0.55	0.75	0.53	3.34	1.59	-	1.77	1.56	116
1"1/4	3.34	1.25	2.48	7.08	2.67	0.61	0.84	0.62	3.74	-	1.94	2.90	2.59	150.8
1"1/2	3.58	1.57	2.97	7.08	2.91	0.72	0.84	0.62	4.13	-	2.14	4.12	3.82	197.2
2"	4.13	1.96	3.58	9.05	3.42	0.88	1.01	0.92	4.92	-	2.73	6.88	6.44	324.8
2"1/2	5.23	2.55	4.60	9.84	4.488	1.18	1.24	1.27	6.57	3.38	-	-	14.12	591.6
3"	5.62	2.99	5.45	9.84	4.90	1.27	1.35	1.53	7.55	-	-	-	21.07	893.2

BREAKAWAY TORQUES in Lbf/in.

psi	size	1/4"3/8"	1/2"	3/4"	1"	1"1/4	1"1/2	2"	2"1/2	3"
	0	14.1	15.9	31.8	40.7	101.7	168.1	243.4	442.5	575.3
	232	15.9	38.1	43.3	52.2	132.7	212.4	336.3	575.3	708.1
	580	22.1	45.1	53.1	61.1	147.8	253.1	371.7	663.8	796.5
	928	28.3	49.5	60.2	70.8					
	1500	33.6	57.5							

The values in Lbf/in may vary depending on the seat material, temperature and type of fluid.
A safety factor of 1,5 should be used (for PTFE).

PRESSURE/TEMPERATURE DIAGRAM

