DAVEY

ECS Series Circulation Pumps

ECS25-8, ECS20-7, ECS20-7-130

Installation and Operating Instructions

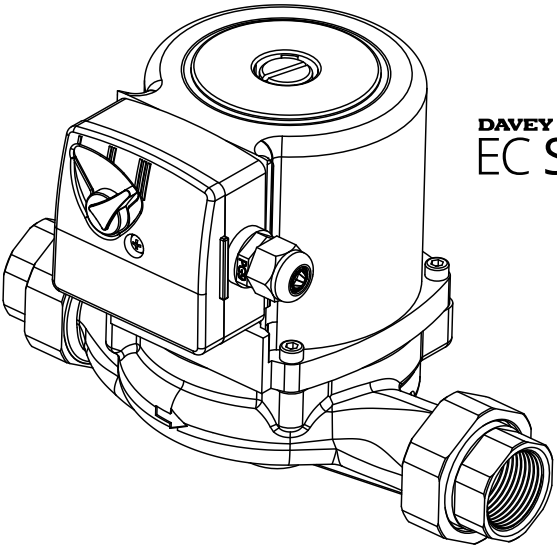

DAVEY
EC Series

IMPORTANT
Please read carefully

CE

daveywater.com

Please pass these instructions on to the owner of this equipment once the product has been installed.

Contents:

WARNINGS **3**

PACKING LIST **4**

YOUR DAVEY CIRCULATION PUMP **4**

INSTALLATION **5**

- **Location** **5**
- **Terminal Box Power** **6**
- **Power Supply Connections** **6**
- **Pipe Connections** **6**

STARTING THE PUMP **6**

- **Before you start ensure that:** **6**
- **Priming and Degassing the Pump** **6**

PUMP OPERATION **7**

TROUBLESHOOTING **7**

SPECIFICATIONS **8**

DIMENSIONS **9**

DAVEY WARRANTY **10**

WARNINGS



WARNING: Failure to follow these instructions and comply with all applicable codes may cause serious bodily injury and/or property damage.



POWER CONNECTIONS AND WIRING MUST BE CARRIED OUT BY AN AUTHORISED ELECTRICIAN.



IMPORTANT INFORMATION: If equipotential bonding structure is required, then an Equipotential Bonding Point is provided. (Please refer to your local wiring standard and regulations).



ATTENTION: Davey Water Products recommends that all installations are fitted with earth leakage or residual current protection devices. Power supply to this pump needs to be through an isolating transformer or RCD, having a rated operating current not exceeding 30mA. In the interests of safety, we advise that the installation must be in accordance with AS3000 wiring rules, or local equivalent. Ensure that an electrical isolation switch be located within easy access so that the pump can be turned off in an emergency.



ATTENTION: This pump is not intended or approved for use with any swimming pool or spa pool applications



This appliance is not intended for use by persons (including children) with reduced physical, sensory or mental capabilities, or lack of experience and knowledge, unless they have been given supervision or instruction concerning use of the appliance by a person responsible for their safety. Children should be supervised to ensure that they do not play with the appliance.



IMPORTANT: This device can be installed on hot water systems, extreme caution should be taken when any works are carried out, as not to cause serious harm due to burn hazards from pressurised hot water.



IMPORTANT: Never operate this device without water supply, the internal motor and bearings require water flow to prevent damage to the device.

PACKING LIST

Circulator Pump x 1

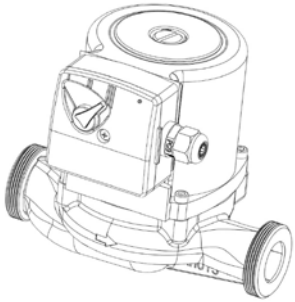

Barrel Unions and BSP-P tails x 2 and 2 x rubber gaskets

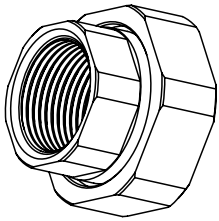

Installation & Operating Manual x 1

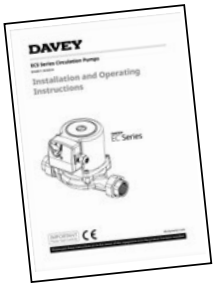

YOUR DAVEY CIRCULATION PUMP

Davey circulation pumps are designed to be utilised in closed circuit domestic and commercial hot water, central heating, cooling or tank air conditioning systems.

Davey circulation pumps have a 3 speed control to provide the correct flow for your application. They are designed for best-in-class efficiency and are constructed to withstand harsh environments.

INSTALLATION

Location

The pump should be located to provide safe access for inspection and maintenance and assembled directly into the pipeline. Never install the pump at the low point of the system as to prevent against the build-up of deposits in the pump. The motor shaft **MUST** always be orientated **horizontally** to ensure the motor and bearings always have adequate water supply. (see installation diagram).

Observe the flow arrow on the main body of the pump and ensure it is orientated correctly to the water flow required.

Install isolation valve before and after the inlet and outlet of the pump to facilitate removal for servicing or replacement.

Incorrect Installation Direction	Details
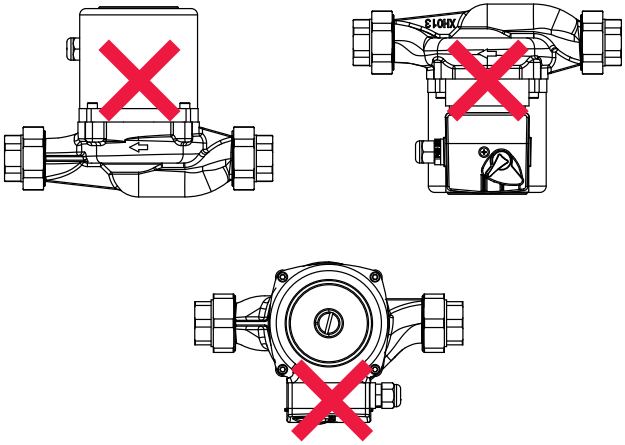	Never position the motor casing vertically, either up or down this will prevent sufficient water flow and may damage the bearings and motor internals. Do not position the control box in the under slung location. Although well sealed, any water ingress cannot drain and may cause damage.

Correct Installation Direction	Details
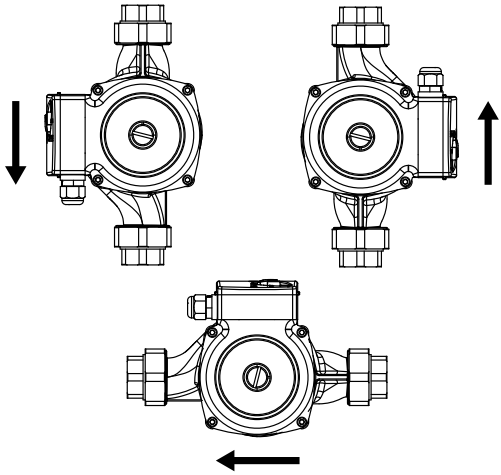	Always position the pump casing to be horizontal to ensure adequate water flow around the motor. It is best practice to have the wiring cable gland (control box) facing downward, this can be achieved by rotating the motor casing.

Terminal Box Power Connection

The terminal box can be orientated around the motor into three (A,B,C) positions depending on the requirements of the application. It is recommended that the cable gland for the power lead face downward to help prevent water ingress.

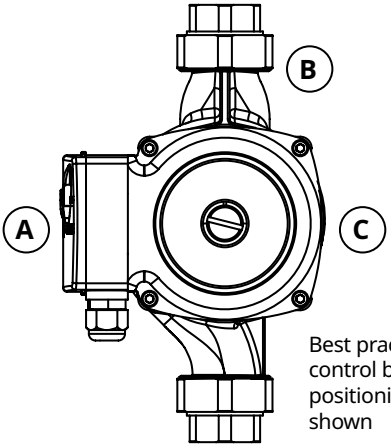

Best practice control box positioning shown

Power Supply Connections

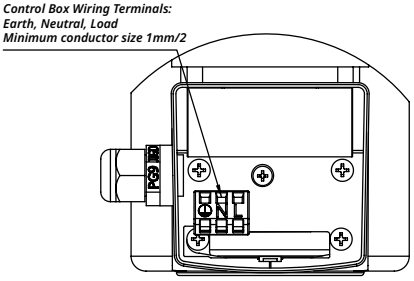

Pipe Connections

Your Davey circulation pump comes with BSP-P female barrel unions and seals, ensure these are seated correctly and do not overtighten the union as this may damage the seal.

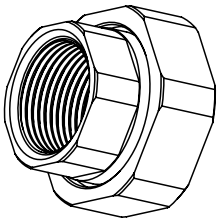

Barrel Union and BSP-P tail

STARTING THE PUMP

Before you start take note that:

- The pump is installed in a safe environment
- The pump enclosure has adequate drainage in the event of leakage
- The pipework is correctly sealed and supported
- The power supply is correctly connected
- All steps have been taken for safe operation
- All valves are open for water to flow

Priming and Degassing the Pump

The motor and bearings in your pump require water to lubricate them during its initial startup, it can be easily damaged if the pump is operated without ensuring the pump has been primed and degassed correctly.

1. Open both inlet and outlet valves and completely fill the system with water.
2. Bleed all air from the system at highest point.
3. Bleed the pump by unscrewing the bleed screw a few turns, observe that no air bubbles are present, and water is running out, close the screw and dry any residual water.

Never run pump dry. Running the pump with no water may damage the mechanical seals, causing leakage and flooding. Dry running damage and associated damage is not covered under warranty.

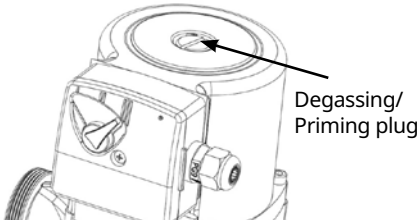

PUMP OPERATION

1. Power up the pump and allow water to circulate for a couple of minutes to dislodge and air pockets caught in the impeller (repeat system bleed if required).
2. Adjust the speed of the pump to suit the application. (Note: excessive noise after the system is bled can mean flow is too high or too low).

TROUBLESHOOTING

Symptoms	Cause	Potential Solution Information
Circulator is noisy	1. Air in circulator. 2. Suction pressure too low. 3. Water flow is too high for system. 4. Foreign bodies in the impeller.	1. Bleed the circulator, loosen the rear plug; continue until there are no more air bubbles, then screw the plug back in. 2. Raise the pressure in the circuit. 3. Select lower speed if exceptable. 4. Check and clean the impeller.
The circulator fails to start	1. Shaft stalled by fouling after prolonged shutdown period. 2. No power to circulator. 3. Capacitor defective. 4. Foreign bodies in the impeller.	1. Using a flat bladed screwdriver in the drive slot under the priming plug, gently free the pump shaft by rotating. 2. Check the circuit fuses. Check the circulator wiring. 3. Replace the capacitor located in the control box. 4. Check and clean the impeller.

SPECIFICATIONS

OPERATING LIMITS		
Models	**ECS25-8**	**ECS20-7 / ECS20-7-130**
Maximum flow (lpm)	86.7	55
Maximum total head (m)	8	6.5
Maximum working pressure (kPa)	1,000kPa (10 bar)	
Fluid temperature range (ºC)	2ºC - 110ºC	
Ambient temperature range (ºC)	0ºC - 40ºC	
Number of motor speeds	3	

ELECTRICAL DATA		
Models	**ECS25-8**	**ECS20-7 / ECS20-7-130**
Input voltage (V)	220-230V	
Input Power Phase	1Ø	
Frequency (Hz)	50	
Full load current (A) Speeds 1, 2 and 3	0.6/0.85/1.1	0.33/0.52/0.73
Input power (P1)	245W	160W
Output power (P2)	90W	70W
Insulation class	H	
IP rating	44	
Speed 1 (RPM)	2300	2100
Speed 2 (RPM)	2450	2300
Speed 3 (RPM)	2750	2500

TEMPERATURE DIFFERENTIAL REQUIREMENTS								
Fluid Temperature °C	2	40	60	80	90	100	105	110
Ambient Temperature °C	0	40	60	80	70	60	55	35

MINIMUM INLET PRESSURE FOR PUMPS BELOW 270 WATTS			
Fluid Temperature	85ºC	90ºC	110ºC
Minimum Inlet Pressure	0.6 bar	0.75 bar	1.5 bar

DIMENSIONS

DIMENSIONS (mm)						
Models	**A**	**B**	**C**	**D**	**E (BSP)**	**Weight (kg)**
ECS25-8	180	130	150	170	1 ½" M / 1" F	4.8
ECS20-7	150	105	130	130	1 ¼" M / ¾" F	2.3
ECS20-7-130	130	105	130	130	1 ¼" M / ¾" M	2.3

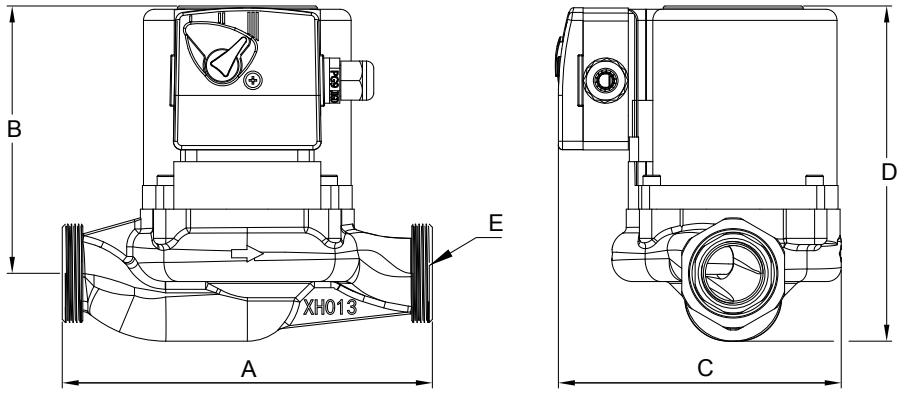

Davey Warranty

Davey Water Products Pty Ltd (Davey) warrants all products sold will be (under normal use and service) free of defects in material and workmanship for a minimum period of one (1) year from the date of original purchase by the customer as marked on the invoice, for specific warranty periods for all Davey products visit daveywater.com.

This warranty does not cover normal wear and tear or apply to a product that has:

- been subject to misuse, neglect, negligence, damage or accident
- been used, operated or maintained other than in accordance with Davey's instructions
- not been installed in accordance with the Installation Instructions or by suitably qualified personnel
- been modified or altered from original specifications or in any way not approved by Davey
- had repairs attempted or made by other than Davey or its authorised dealers
- been subject to abnormal conditions such as incorrect voltage supply, lightning or high voltage spikes, or damages from electrolytic action, cavitation, sand, corrosive, saline or abrasive liquids,

The Davey warranty does not cover replacement of any product consumables or defects in products and components that have been supplied to Davey by third parties (however Davey will provide reasonable assistance to obtain the benefit of any third-party warranty).

To make a warranty claim:

- If the product is suspected of being defective, stop using it and contact the original place of purchase. Alternatively, phone Davey Customer Service or send a letter to Davey as per the contact details below
- Provide evidence or proof of date of original purchase
- If requested, return the product and/or provide further information with respect to the claim. Returning the product to the place of purchase is at your cost and is your responsibility.
- The warranty claim will be assessed by Davey on the basis of their product knowledge and reasonable judgement and will be accepted if:
  - a relevant defect is found
  - the warranty claim is made during the relevant warranty period; and
  - none of the excluded conditions listed above apply
- The customer will be notified of the warranty decision in writing and if found to be invalid the customer must organise collection of the product at their expense or authorise its disposal.

If the claim is found to be valid Davey will, at its option, repair or replace the product free of charge.

The Davey warranty is in addition to rights provided by local consumer law. You are entitled to a replacement or refund for a major failure and compensation for any other reasonably foreseeable loss or damage. You are also entitled to have the goods repaired or replaced if the goods fail to be of acceptable quality and the failure does not amount to a major failure.

For any internet connected products the consumer is responsible for ensuring a stable internet connection. In the event of a network failure the consumer will need to address the concern with the service provider. Use of an App is not a substitute for the User's own vigilance in ensuring the product is working to expectation.

Use of a Smart Product App is at the User's own risk. To the fullest extent permitted by law Davey disclaims any warranties regarding the accuracy, completeness or reliability of App data. Davey is not responsible for any direct or indirect loss, damage or costs to the User arising from its reliance on internet connectivity. The User indemnifies Davey against any claims or legal actions from them or others relying on internet connectivity or App data may bring in this regard.

Products presented for repair may be replaced by refurbished products of the same type rather than being repaired. Refurbished parts may be used to repair the products. The repair of your products may result in the loss of any user-generated data. Please ensure that you have made a copy of any data saved on your products.

To the fullest extent permitted by law or statute, Davey shall not be liable for any loss of profits or any consequential, indirect or special loss, damage or injury of any kind whatsoever arising directly or indirectly from Davey products. This limitation does not apply to any liability of Davey for failure to comply with a consumer guarantee applicable to your Davey product under local laws and does not affect any rights or remedies that may be available to you under local laws.

For a complete list of Davey Dealers visit our website (daveywater.com).

DAVEY

Davey Water Products Pty Ltd
A member of the Waterco Group
ABN 18 066 327 517

daveywater.com

AUSTRALIA

Head Office
6 Lakeview Drive,
Scoresby, Australia 3179
Ph: 1300 232 839
Fax: 1300 369 119
Email: sales@daveywater.com

NEW ZEALAND

4 Waiouru Road,
East Tāmaki, Auckland NZ 2013
Ph: 0800 654 333
Fax: 0800 654 334
Email: sales@dwp.co.nz

EUROPE

7 rue Eugène Hénaff 69200
Vénissieux, France
Ph: +33 (0) 4 72 13 95 07
Email: info@daveyeurope.eu

NORTH AMERICA

Ph: 1-888-755-8654
Email: info@daveyusa.com

MIDDLE EAST

Ph: +971 50 6368764
Fax: +971 6 5730472
Email: info@daveyuae.com

® Davey is a trademark of Davey Water Products Pty Ltd. © Davey Water Products Pty Ltd 2026.