ANNOVI REVERBERI
The Power of Experience

EASY

Version:
Serial number:
Code: **14299**

10/07/2017

220-240 V - 50/60 Hz | **schuko**

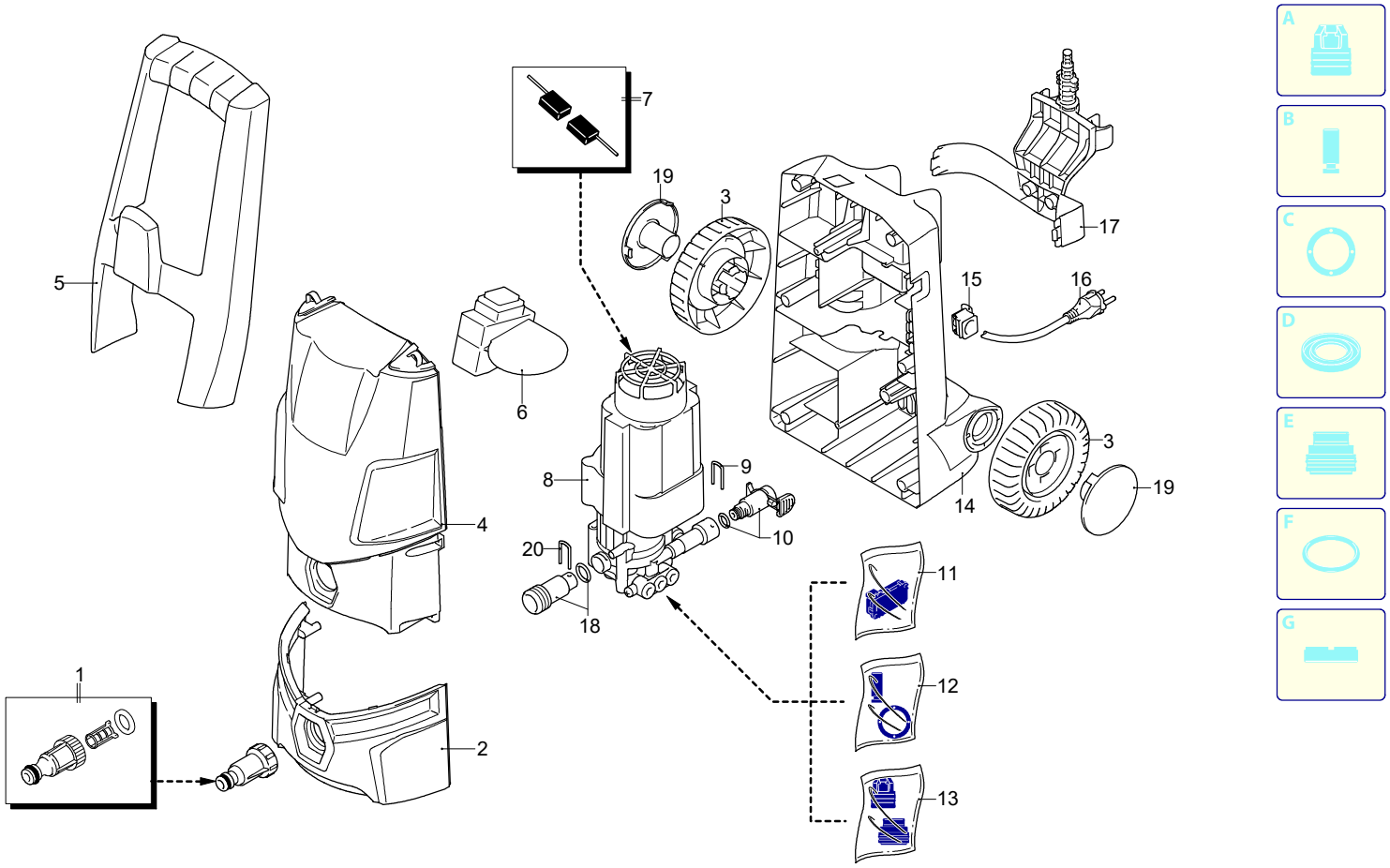

UN_CE_0567-DQ

Validity	Pos.	Code	Description	Q
	1	3082130	Water coupling kit	1
	2	3480290	Casing	1
	3	3081140	Wheel	2
	4	3480289	Casing	1
	5	3480090	Handle	1
	6	3480110	Switch	1
	7	3480170	Brush kit for motor	1
	8	3480190	Electric pump assembly	1
	9	3500090	Fork	1
	10	3500083	Fitting	1
	11	3480130	TSS kit	1
	12	3480150	Piston + seals kit	1
	13	3480140	Valves + seals kit	1
	14	3480020	Base	1
	15	3080580	Cable gland	1
	16	50940	Cable	1
	17	3480060	Accessories carrier	1
	18	3480120	Suction kit	1
	19	3081182	Guard	2
	20	3480160	Fork	1

ANNOVI REVERBERI
The Power of Experience

EASY

Version:
Serial number:
Code: **14299**

10/07/2017

220-240 V - 50/60 Hz | schuko

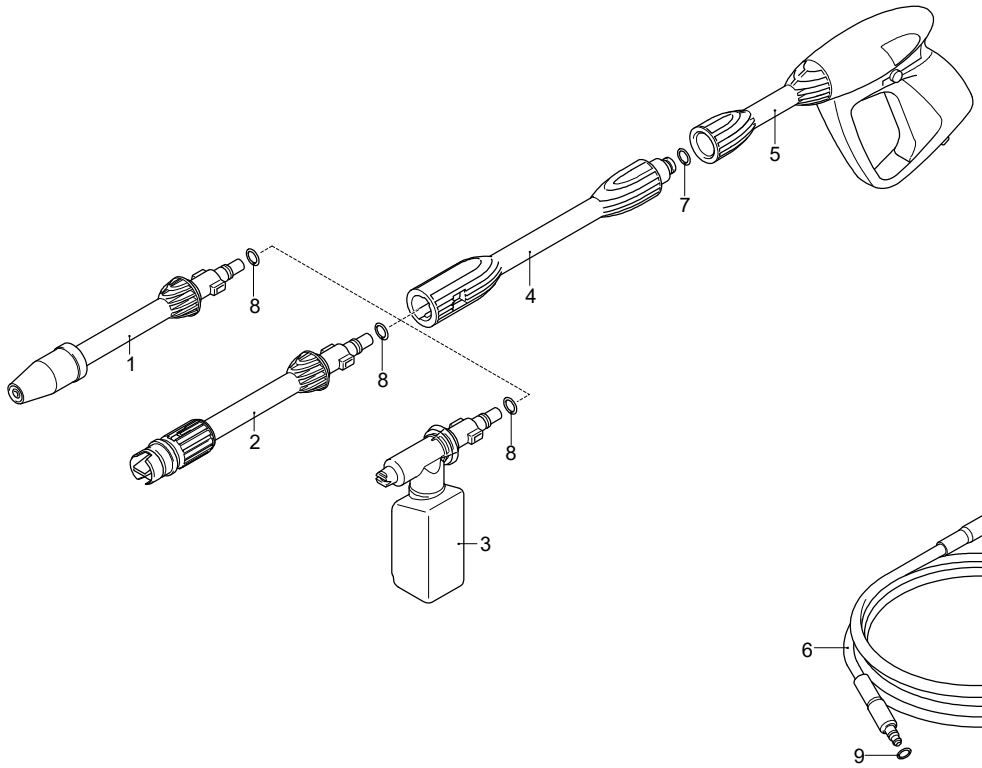

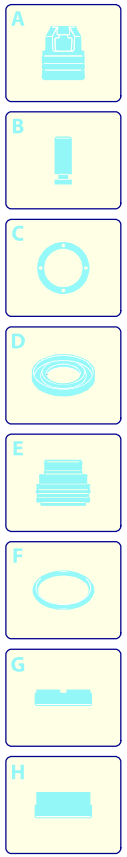

Validity	Pos.	Code	Description	Q
	1	3080080	Lance+rotopower	1
	2	3080090	Lance+lance head	1
	3	3480200	Tank	1
	4	3080070	Extension	1
	5	3080060	Gun	1
	6	3500350	High pressure hose	1
	7	3085000	O-ring	1
	8	3083700	O-ring	3
	9	3083400	O-ring	2

UN_CE_0441-AN