DAVEY

Dynajet Single Stage Jet Assisted Pumps

XJ50/P/T, XJ70/P/T, XJ90/P/T, X50, X70 X90

Installation and Operating Instructions



DAVEY X Series



DAVEY XJ Series

IMPORTANT
Please read carefully

daveywater.com

Please pass these instructions on to the owner of this equipment once the product has been installed.

Contents:

WARNINGS 2
MODEL VARIANTS 3
CRITICAL REQUIREMENTS 4
CHOOSING A SITE 4
INSTALLATION TYPES 5
- Housing your Davey pump 5
- Above ground water sources (flooded suction) 5
- In-ground water sources 5
- Spear Point Installation 6
- Connection to mains or town water supply systems 6
- Installation to hot water system 6

PIPE CONNECTIONS 7
STARTING THE PUMP 8
CHECKING AND RECHARGING YOUR PRESSURE TANK 8
TROUBLESHOOTING 9
DAVEY WARRANTY 10

WARNINGS

WARNING: Failure to follow these instructions and comply with all applicable codes may cause serious bodily injury and/or property damage.

WARNING: This appliance is not intended for use by persons (including children) with reduced physical sensory or mental capabilities, or lack of experience and knowledge, unless they have been given supervision or instruction concerning use of the appliance by a person responsible for their safety. Children should be supervised to ensure that they do not play with the appliance.

ATTENTION: Device is to be supplied through a residual current device (RCD) having a rated residual operating current not exceeding 30mA.

NOTE: If the supply cord is damaged, it must be replaced by the manufacturer, its service agent or similarly qualified persons in order to avoid a hazard.

NOTE: For protection, the pump motor is fitted with an automatic "over temperature" cut-out. Constant tripping of this overload device indicates a problem e.g. low voltage at pump, excessive temperature (above 50°C) in pump enclosure.

NOTE: If the supply cord is damaged, it must be replaced by the manufacturer, its service agent or similarly qualified persons in order to avoid a hazard.

MODEL VARIANTS

X Series – These models are a plug and play and come with a pressure switch and pressure tank convienently mounted on a all in one base.

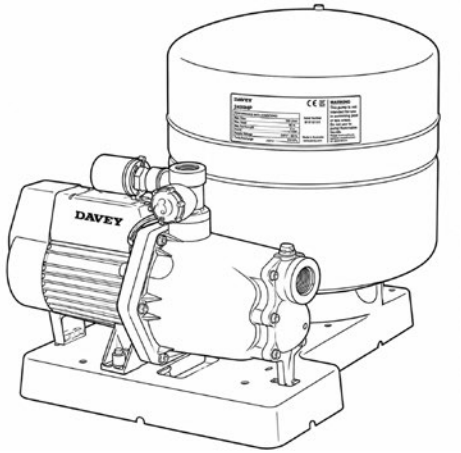

XJ/P Series – These models are specified with a pressure switch control for applications that require the basic operation of a conventional pressure switch.

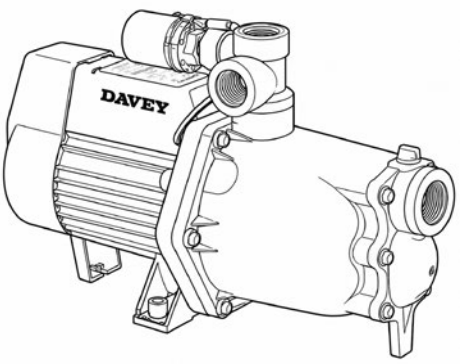

XJ/T Series – Using the Davey Torrium controller this series provides for a wide variety of home pressure applications.

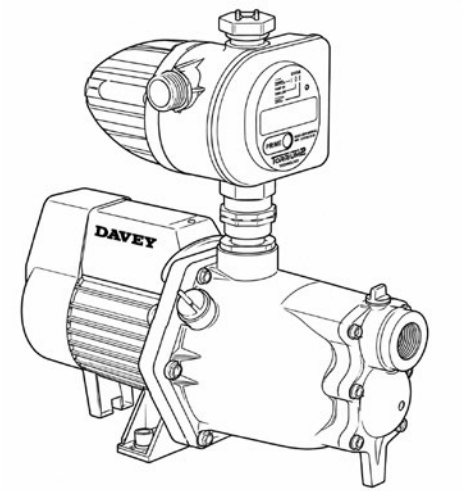

CRITICAL REQUIREMENTS

- The pump is installed in a safe and dry environment
- The pump enclosure has adequate drainage in the event of leakage
- Any transport plugs are removed
- The pipework is correctly sealed and supported
- The pump is primed correctly
- The power supply is correctly connected
- All steps have been taken for safe operation

CHOOSING A SITE

Choose a clean and dry site with a firm base as close to the water source as possible with correct power supply. Make sure your pump is always connected to an adequate, reliable source of clean water. To protect your pump from the weather, make sure the pump house is both waterproof, frost free and has adequate ventilation. The pump should be mounted allowing for drainage, to avoid damage to flooring etc. that over time may occur from leaking pipe joints or pump seals.

Do not mount the pump vertically. Never place flammable materials on, or near your pump. It is possible to adjust the pressure set point.

Some plumbing authorities impose a pressure limitation on the pressure of water into a dwelling. Consideration of operating pressures should also be given to appliances within the dwelling. If unsure, check with local authorities, or a licenced contractor.

The Pump outlet and inlet must be correctly supported (see image under **PIPE CONNECTIONS**).

INSTALLATION TYPES

Housing your Davey pump

To protect your pump from the weather, make sure the pump is housed in the water proof, frost free and well ventilated area. Ensure that it is mounted on a firm base and is secured as per the provided mounting points, as not to place undue stress on pipework and connections.

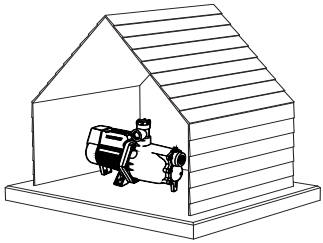

Above ground water sources (flooded suction)

Installations with flooded suction require a isolation valve so water supply can be turned off for pump removal and servicing. There is no need to install a one-way check valve in the suction pipeline as there is a one-way check valve installed in the tee piece immediately on top of the Dynajet pump discharge as well as the inlet.

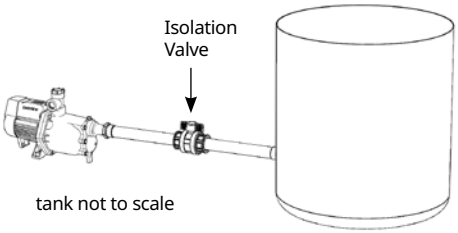

In-ground water sources (eg suction lift from in ground tank)

Whenever the installation position of the pump is higher than the lowest water level, a foot valve should be fitted to the end of the suction pipe.

Ensure that the foot valve is at least 500mm below minimum water level to avoid a vortex of air being drawn into pipe.

As pictured always ensure the installation of your Davey Dynajet suction pipe is no more than 4mts from the pump inlet to the water level.

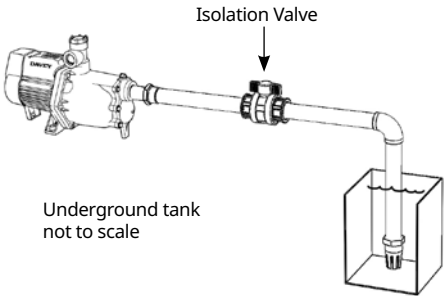

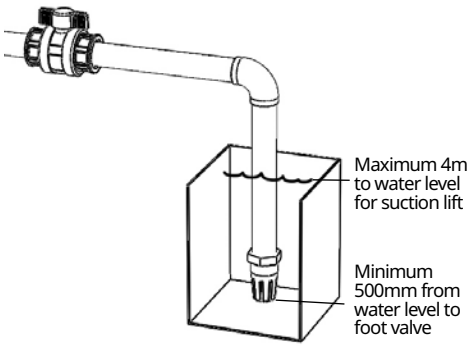

Spear Point installation

When the DynaJet is installed on a spear point, a check valve must be fitted immediately on top of the spear point itself. DO NOT INSTALL CHECK VALVE AT THE TOP OF THE WELL.

NOTE : Be certain to select the spear point to suit the well conditions and regulate the pump accordingly.

Spear Point Size	Mesh	Approx. Max. Capacity of Spear
1¼" (32mm)	60	15 - 23 l/min or 200 - 300 gal/hr
1½" (38mm)	60	23 - 38 l/min or 300 - 500 gal/hr
1¼" (32mm)	60	38 - 75 l/min or 500 - 1,000 gal/hr

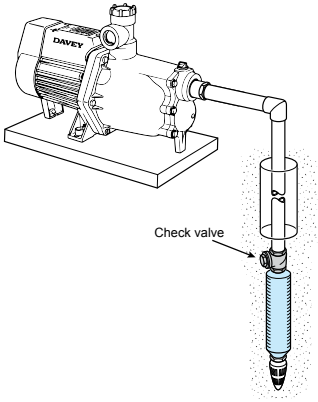

Connection to mains or town water supply systems

Water mains supply authorities have regulations surrounding direct connection to mains water supply, please consult your Davey dealer for specific details for your location. In a lot of cases either an isolation tank (as pictured) or certified backflow prevention valves are used. Directly applied mains pressure can easily exceed the pumps maximum operating pressure so please ensure the system operates with pump specifications. Davey Water Products Pty Ltd cannot accept responsibility for loss or damage resulting from incorrect, or unauthorised installations.

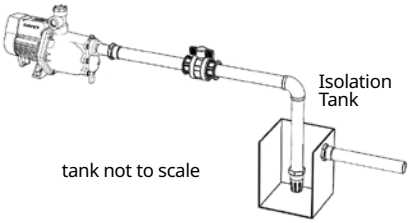

Installation to hot water system

Always protect your system from damage caused by back pressure from hot water systems.

You should always have installed on the hot water inlet an approved non-return valve.

Always ensure the installation meets the appropriate regulations for your local area.

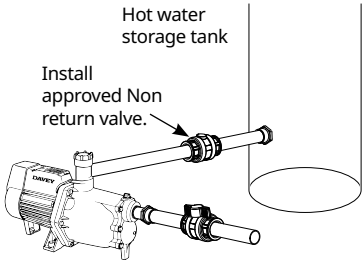

PIPE CONNECTIONS

For best performance use P.V.C, or polythene pipe with a diameter at least the same as the pump's inlet. Larger diameter pipe may be used to minimise resistance to flow when pumping for distances longer than 5m (16'). Use unions at pipe connections to enable easy removal and servicing.

Use enough thread sealing tape or cord to ensure airtight seal and hand tighten only, do not screw connections all the way into suction port. To prevent strain on pump thread always support heavy inlet and outlet pipes.

Lay suction pipe at a constant gradient to avoid air pockets which may reduce pump efficiency, avoid installing 90° elbows before the suction inlet of the pump, within a distance equivalent to 5 x pipe diameter. For example: using 40mm (1½") suction pipe, avoid installing a 90° elbow within 200mm (7¾") of the pump inlet this will assist laminar flow.

Always ensure the pipework is correctly supported as per the image below.

The pipework for both the inlet and outlet of your pump must be correctly supported.

Securely fastened pipe supports must be installed on both the inlet and outlet pipework. These supports must be either firmly ground-mounted or wall-mounted and positioned approximately 500 mm (X) from the pump inlet and outlet connections.

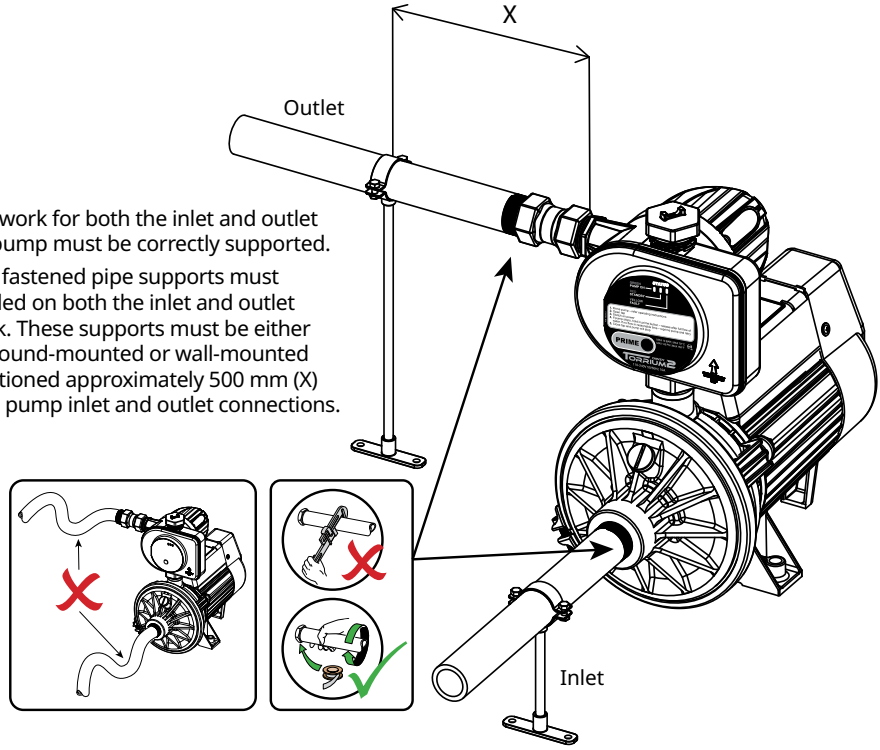

STARTING THE PUMP

Priming:

1. Remove the priming plug in the top of the pump housing.
2. Fill the housing with water. Note if it's a flooded suction (water higher than pump) just open the shut off valve and when full replace the priming plug.
3. Ensure all valves are open and open a tap in furthest point from the pump.
4. Turn on the pump, observe the water flow should strong and continuous, run for 20-30 seconds to expel any air in the system then close the tap.
5. If there is no water supply from the tap repeat previous steps and check pump has adequate water supply.

CHECKING AND RECHARGING YOUR PRESSURE TANK

Supercell "P" Pressure Tanks do not require regular checks under normal operating conditions, If air charge adjustment is required then follow the following procedures:

1. Release all water pressure from the pressure tank by switching off the pump at the power point, and opening the closet tap. For above ground supply tanks it is necessary to close the gate valve between the supply tank and the pump.

   NOTE: leave tap open during air replenishment.

2. When all water pressure has been released from the system, check air pressure at air valve on top of pressure tank. The standard pre-charge pressure reading should be 165kPa for X50 and 190kPa for X70 and X90 models. In any case the pre-charge should be set at 15kPa below cut-in pressure.

3. If necessary, replenish air charge to the correct pressure required. Ensure that a tap in outlet piping of pumps is open during replenishment of air pre-charge.

Periodical Checks

Flushing: Depending on the quality of the pumped water, from time to time, your tank may required flushing to remove settled fines such as mud or sand.

If sand or mud is allowed to stay in the tank, it will accelerate wear on the internal lining and shorten your tank's life.

Safely disconnect the tank from the water supply, discharge all air from the tank and flush the tank several times with clean water. Once the flushing water is clean, reconnect the tank and recharge the air as per above.

TROUBLESHOOTING

a) MOTOR RUNS WHEN SWITCHED ON BUT DOES NOT PUMP.

1. Suction line and pump body not filled with water.
2. Air leaks in suction lines or suction pipe not under water.
3. Air trapped in suction lines (also possible with flooded suction due to uneven rise in piping; eliminate humps and hollows).
4. No water at source or water level too low.
5. Valve on suction lines closed.

b) PUMP SWITCHES ON AND OFF FREQUENTLY (CYCLING)

1. Check that tank air pressure is correct - see above.
2. Leaking taps, float valves etc. check plumbing.
3. Leaking check valve/foot valve.

c) MOTOR DOESN'T START WHEN SWITCHED ON.

1. Power not connected.
2. Supply voltage too low.
3. "Over temperature" cut-out tripped.*
4. Motor not free to turn eg. a jammed impeller.
5. Internal motor fault.

Note:
For pump protection the motor is fitted with an automatic "over temperature" cut out. Constant tripping of this overload device indicates an ongoing problem. Eg. Low voltage or excessive temperature (above 45°C)

Davey Warranty

Davey Water Products Pty Ltd (Davey) warrants all products sold will be (under normal use and service) free of defects in material and workmanship for a minimum period of one (1) year from the date of original purchase by the customer as marked on the invoice, for specific warranty periods for all Davey products visit daveywater.com.

This warranty does not cover normal wear and tear or apply to a product that has:

- been subject to misuse, neglect, negligence, damage or accident
- been used, operated or maintained other than in accordance with Davey's instructions
- not been installed in accordance with the Installation Instructions or by suitably qualified personnel
- been modified or altered from original specifications or in any way not approved by Davey
- had repairs attempted or made by other than Davey or its authorised dealers
- been subject to abnormal conditions such as incorrect voltage supply, lightning or high voltage spikes, or damages from electrolytic action, cavitation, sand, corrosive, saline or abrasive liquids,

The Davey warranty does not cover replacement of any product consumables or defects in products and components that have been supplied to Davey by third parties (however Davey will provide reasonable assistance to obtain the benefit of any third-party warranty).

To make a warranty claim:

- If the product is suspected of being defective, stop using it and contact the original place of purchase. Alternatively, phone Davey Customer Service or send a letter to Davey as per the contact details below
- Provide evidence or proof of date of original purchase
- If requested, return the product and/or provide further information with respect to the claim. Returning the product to the place of purchase is at your cost and is your responsibility.
- The warranty claim will be assessed by Davey on the basis of their product knowledge and reasonable judgement and will be accepted if:
  - a relevant defect is found
  - the warranty claim is made during the relevant warranty period; and
  - none of the excluded conditions listed above apply
- The customer will be notified of the warranty decision in writing and if found to be invalid the customer must organise collection of the product at their expense or authorise its disposal.

If the claim is found to be valid Davey will, at its option, repair or replace the product free of charge.

The Davey warranty is in addition to rights provided by local consumer law. You are entitled to a replacement or refund for a major failure and compensation for any other reasonably foreseeable loss or damage. You are also entitled to have the goods repaired or replaced if the goods fail to be of acceptable quality and the failure does not amount to a major failure.

For any internet connected products the consumer is responsible for ensuring a stable internet connection. In the event of a network failure the consumer will need to address the concern with the service provider. Use of an App is not a substitute for the User's own vigilance in ensuring the product is working to expectation.

Use of a Smart Product App is at the User's own risk. To the fullest extent permitted by law Davey disclaims any warranties regarding the accuracy, completeness or reliability of App data. Davey is not responsible for any direct or indirect loss, damage or costs to the User arising from its reliance on internet connectivity. The User indemnifies Davey against any claims or legal actions from them or others relying on internet connectivity or App data may bring in this regard.

Products presented for repair may be replaced by refurbished products of the same type rather than being repaired. Refurbished parts may be used to repair the products. The repair of your products may result in the loss of any user-generated data. Please ensure that you have made a copy of any data saved on your products.

To the fullest extent permitted by law or statute, Davey shall not be liable for any loss of profits or any consequential, indirect or special loss, damage or injury of any kind whatsoever arising directly or indirectly from Davey products. This limitation does not apply to any liability of Davey for failure to comply with a consumer warranty applicable to your Davey product under local laws and does not affect any rights or remedies that may be available to you under local laws.

For a complete list of Davey Dealers visit our website (daveywater.com).

DAVEY

Davey Water Products Pty Ltd
A member of the Waterco Group
ABN 18 066 327 517

daveywater.com

AUSTRALIA

Head Office
6 Lakeview Drive,
Scoresby, Australia 3179
Ph: 1300 232 839
Fax: 1300 369 119
Email: sales@daveywater.com

NEW ZEALAND

4 Waiouru Road,
East Tāmaki, Auckland NZ 2013
Ph: 0800 654 333
Fax: 0800 654 334
Email: sales@dwp.co.nz

EUROPE

7 rue Eugène Hénaff 69200
Vénissieux, France
Ph: +33 (0) 4 72 13 95 07
Email: info@daveyeurope.eu

NORTH AMERICA

Ph: 1-888-755-8654
Email: info@daveyusa.com

MIDDLE EAST

Ph: +971 50 6368764
Fax: +971 6 5730472
Email: info@daveyuae.com

® Davey is a trademark of Davey Water Products Pty Ltd. © Davey Water Products Pty Ltd 2026.