DAVEY

Constant Pressure System

Models:	**DD60-10(CE)**	CE
	DD90-11(CE)	
	DD160-19(CE)	

Installation and Operating Instructions



DAVEY DynaDrive™





DAVEY DynaDrive™ PRO

IMPORTANT
Please read carefully

daveywater.com

Please pass these instructions on to the owner of this equipment once the product has been installed.

Contents:

1. PRIOR TO USING THIS PRESSURE SYSTEM, YOU MUST ENSURE THAT 4
2. YOUR NEW SYSTEM 4
3. INSTALLATION 5
   3.1 Choosing a site 5
   3.2 Pipe connections 5
   3.3 Power connection 6
   3.4 The pressure tank 7
4. APPLICATIONS 8
   4.1 Above ground water sources (flooded suction) 8
   4.2 In-ground water sources (eg suction lift from in ground tank) 8
   4.3 Connecting mains scheme or town water supply 9
   4.4 Installs with a mains pressure hot water system 9
5. FEATURES 10
   5.1 System features 10
   5.2 VSD features 10
   5.3 DynaDrive display layout 10
6. OPERATION 11
   6.1 Initial power up 11
   6.2 Start up procedure 12
   6.3 Adjusting the factory set pressure 12
   6.4 Advance settings DD60-10 & DD90-11 13
   6.5 Advance settings DD160-19 15
   6.6 Operational data displays DD160-19 19
   6.7 Extra draw-off capacity 20
   6.8 Decommissioning the DynaDrive 20
   6.9 Input connections DD60-10 & DD90-11 21
   6.10 Input connections DD160-19 22
   6.11 Daisy-chain multiple DynaDrive systems DD60-10 & DD90-11 23
   6.12 Daisy-chain multiple DynaDrive systems DD160-19 24
7. MAINTENANCE 25
   7.1 Periodic pressure tank checks 25
8. TROUBLESHOOTING 26
9. SPARE PARTS 28
10. DAVEY WARRANTY 32



CAUTION: This pump has been evaluated for use with water only. Do not insert any object in the opening. Before using this pump, the pump must be well installed. Children should be supervised that they do not play with the pump. NPT model variants acceptable for indoor use only, do not used outdoor. For use with maximum 80°C (176°F) water.



WARNING: Risk of electric shock. This pump is supplied with a grounding conductor and grounding-type attachment plug. To reduce the risk of electric shock, be certain that it is connected only to a properly grounded, grounding-type receptacle. Non-submersible pump. This pump has not been investigated for use in swimming pool or marine areas. To reduce risk of electric shock, pull plug before servicing or cleaning this pump. Do not operate this pump with wet hands.



ATTENTION: The DynaDrive system and associated pipework operate under pressure. Under no circumstances should the DynaDrive system, or associated pipework be disassembled unless the internal pressure of the system has been relieved. Failure to observe this warning will expose persons to the possibility of personal injury and may also result in damage to the pump, pipework or other property.

This appliance is not intended for use by persons (including children) with reduced physical, sensory or mental capabilities, or lack of experience and knowledge, unless they have been given supervision or instruction concerning use of the appliance by a person responsible for their safety. Children should be supervised to ensure that they do not play with the appliance. This appliance can be used by children from aged 8 years and above and persons with reduced physical sensory, mental capabilities, or lack of experience and knowledge if they have been given supervision, or instruction concerning use of the appliance in a safe way and understand the hazards involved.



IMPORTANT: If the supply cord is damaged, it must be replaced by the manufacturer, its service agent, or similarly qualified persons in order to avoid a hazard. Cleaning and user maintenance shall not be made by children without supervision. Children shall not play with the appliance.
Outside the United States, pump is to be supplied through a residual current device (RCD) having a rated residual operating current not exceeding 30mA.
In the United States, the National Electrical Code requires GFCI devices intended to protect people to interrupt the circuit if the leakage current exceeds a range of 4-6mA of current (the trip setting is typically 5mA) within 25ms. GFCI devices which protect equipment (not people) are allowed to trip as high as 30mA of current.

Prior to installation remove the inlet and outlet pipe transport plugs and associated seals from the suction and/or discharge ports.

1. PRIOR TO USING THIS PRESSURE SYSTEM, YOU MUST ENSURE THAT

- The pump is installed in a safe and dry environment
- The pump enclosure has adequate drainage in the event of leakage
- Any transport plugs are removed
- The pipework is correctly sealed and supported
- The pump is primed correctly
- The power supply is correctly connected
- All steps have been taken for safe operation

Appropriate details for all these items are contained in the following Installation and Operating Instructions. Read these in their entirety before switching on this pump. If you are uncertain as to any of these Installation and Operating Instructions, please contact your Davey dealer, or the appropriate Davey office as listed on the back of this document.

2. YOUR NEW SYSTEM

1. Suction inlet
2. Pump body
3. Pump priming plug
4. Discharge/delivery outlet
5. DynaDrive control module
6. Motor
7. Pressure tank (optional extra for CE model variants)

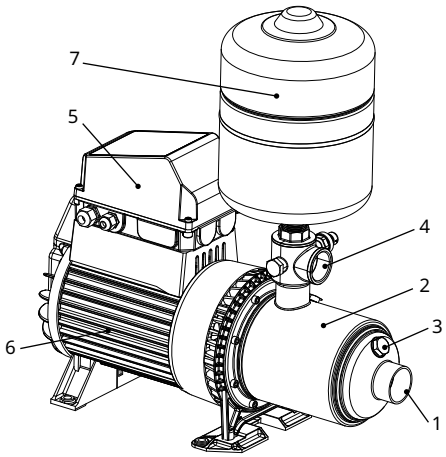

3. INSTALLATION

3.1 Choosing a Site

Choose a clean and dry site with a firm base as close to the water source as possible with correct power supply. Make sure your pump is always connected to an adequate, reliable source of clean water. To protect your pump from the weather, make sure the pump house is both waterproof, frost free and has adequate ventilation. The pump should be mounted on a firm base allowing for drainage, to avoid damage to flooring etc., that over time may occur from leaking pipe joints or pump seals. Do not mount the pump vertically. Never place flammable materials on, or near your pump.

However, it is possible to adjust the pressure set point. Some plumbing authorities impose a pressure limitation on the pressure of water into a dwelling. Consideration of operating pressures should also be given to appliances within the dwelling. If unsure, check with local authorities, or a licenced contractor.

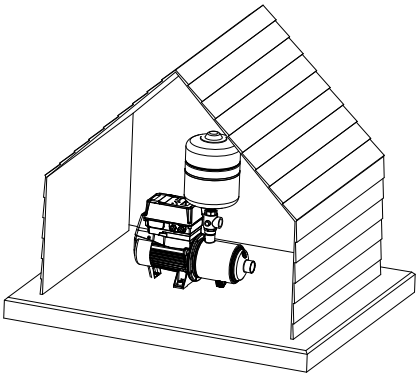

3.2 Pipe Connections

IMPORTANT: Suction leaks are the largest cause of poor pump performance and are difficult to detect. Ensure all connections are completely sealed using thread tape only. DO NOT USE SEALING COMPOUNDS, HEMP, OR PIPE DOPE.

For best performance use P.V.C, or polythene pipe with a diameter at least the same as the pump's inlet. Larger diameter pipe may be used to minimise resistance to flow when pumping for distances longer than 5m (16'). Use unions at pipe connections to enable easy removal and servicing.

Use enough "plumbers' tape" to ensure airtight seal and hand tighten only, do not screw connections all the way into suction port, see figure top right. To prevent strain on pump thread always support heavy inlet and outlet pipes.

Lay suction pipe at a constant gradient to avoid air pockets which may reduce pump efficiency, see figure below right.

Avoid installing 90° elbows before the suction inlet of the pump, within a distance equivalent to 5 x pipe diameter. For example: using 40mm (1½") suction pipe, avoid installing a 90° elbow within 200mm (7¾") of the pump inlet. This will assist laminar flow.

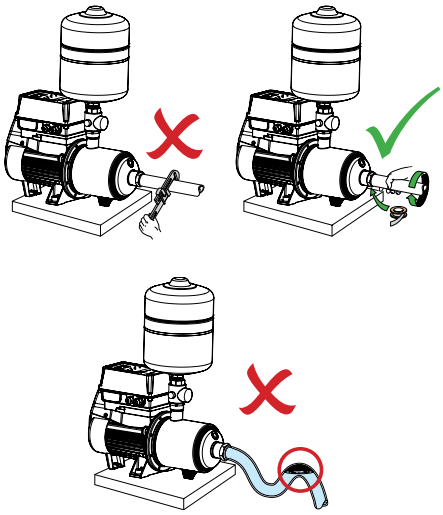

3.3 Power Connection



IMPORTANT: Long extension leads should be avoided as they often have insufficient current carrying capacity to run electric motors, hence they can cause substantial voltage drop and operating problems.

If the electrical fittings in your country make it necessary to remove the plug from the lead fixed to the motor care should be taken to ensure that the earth conductor green/yellow in the lead is properly connected to a good earth.



ATTENTION: Ensure that any and all electrical work is only undertaken by an authorized electrician. Before obtaining access to terminals, all supply circuits must be disconnected.

The electrical connections and checks must be made by a qualified electrician and comply with applicable local standards. Poor installation, or poor power supply may even result in electrical fires!



ATTENTION: Automatic reset thermal overloads will allow the pump to restart without warning. ALWAYS disconnect the pump motor from the electrical supply before maintenance or repairs.

NOTE:

- Ensure motor is connected to power supply specified on nameplate;
- Although the Davey electric motor is specifically engineered to perform on a range of power supply voltages, malfunctions or failure caused by adverse voltage supply conditions are not covered under guarantee.



ATTENTION: To prevent personal injury, ensure all water pressure is released from the pressure system prior to work being performed.

3.4 The Pressure Tank

IMPORTANT: Air pressure in pressure tank should be set to 70% of the DynaDrive set pressure. For example, the pressure that DynaDrive comes pre-set to is as follows:

DD60-10(CE) 400kPa (58psi);
DD90-11(CE) 400kPa (58psi);
DD160-19 400kPa (58psi);

The default air pressure of the pressure tank used with DynaDrive should be set to:

DD60-10 280kPa (41psi);
DD90-11 280kPa (41psi);
DD60-10CE 280kPa (41psi) tank purchased separately;
DD90-11CE 280kPa (41psi) tank purchased separately;
DD160-19 280kPa (41psi);

Never over-charge the tank. Always use air at ambient temperature. Do not overtighten. During air replenishment the tank should be externally inspected. Any signs of leakage from the tank may indicate a need for immediate replacement.

If air charge adjustment is required, then follow these procedures:

- Remove the pressure tank completely from pump installation, ensuring to isolate the pressure tank and release the water pressure from the tank beforehand; or
- Release all water pressure from the pressure tank by switching off the pump at the power point and opening the closest tap. For above ground supply tanks, it is necessary to close the gate valve between the supply tank and the pump;

ATTENTION: To prevent personal injury, ensure all water pressure is released from the pressure system prior to work being performed.

- Leave tap open during air replenishment;
- When all water pressure has been released from the system, check air pressure at air valve on top of pressure tank. The pre-charge pressure reading should be 70% of set point pressure;
- If necessary, replenish air charge to the correct pressure indicated. Ensure that a tap in outlet piping of pump is open during replenishment of air pre-charge.

4. APPLICATIONS

4.1 Above ground water sources (flooded suction)

Installations with flooded suction require a isolation valve so water supply can be turned off for pump removal and servicing. There is no need to install a one-way check valve in the suction pipeline as there is a one-way check valve installed in the tee piece immediately on top of the DynaDrive pump discharge as well as the inlet.

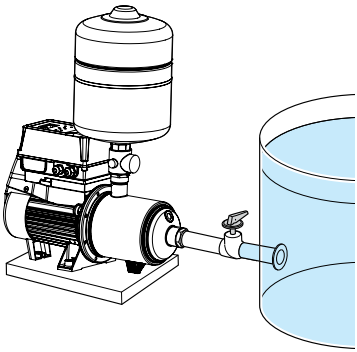

4.2 In-ground water sources (eg. suction lift from in ground tank)

Whenever the installation position of the pump is higher than the lowest water level, a foot valve should be fitted to the end of the suction pipe, see figure right. Ensure that the foot valve is at least ½ metre (1⅔ feet) below minimum water level to avoid a vortex of air being drawn into pipe.

Ensure pump and suction line are well primed to aid initial suction lift.

In suction lift installations that have an unreliable foot-valve it may be preferable to remove the check valve in the DynaDrive discharge tee piece. Doing so will allow the DynaDrive pressure transducer to "recognise" a loss of water from a suction line, while the DynaDrive is in standby. Applications of this nature, with long &/or wide suction lines consist of a considerable volume of water, ie > 100 litres (26 US gallons) in the suction pipe. Temperature variations of the water may create fluctuations in the pressure of the water, falsely triggering the DynaDrive to start/ stop. In such as case, it is worth considering upsizing the pressure tank to help absorb these pressure fluctuations. If concerned, please consult your Davey representative.

Please consider the Net Positive Suction Head when using the DynaDrive for these types of applications.

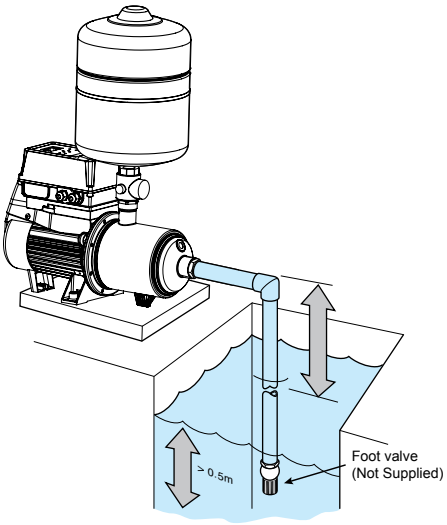

4.3 Connecting mains scheme or town water supply

Most Water Supply Authorities have strict regulations regarding direct connection of pumps to mains water supplies. In most cases an isolating tank is required between mains supply and pump, see figure right. Davey also recommend this method. Directly applied mains pressure can exceed pump operating pressure and damage pump. Davey Water Products Pty Ltd cannot accept responsibility for loss, or damage resulting from incorrect, or unauthorized installations.

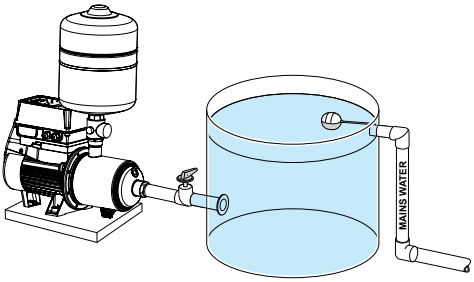

4.4 Installs with a mains pressure hot water system

ATTENTION: Always ensure hot water systems are installed in compliance with manufacturers recommendations and in accordance with all local regulations.

To protect your system from damage caused by back pressure from hot water systems, see figure right. You should always have installed on the hot water inlet an approved non-return valve.

Davey Water Products Pty Ltd cannot accept responsibility for loss or damage resulting from incorrect, or unauthorised installations.

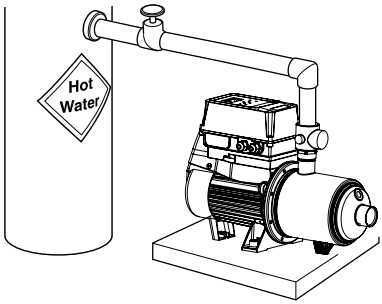

5. FEATURES

5.1 System features

- Provides warning indications for system faults;
- Has adjustable pressure setting to allow for various operating conditions;
- Provides automatic “cut-out” protection should the pump run out of water, should the pump fail to start due to low voltage or a blockage in the pump;
  - Allows for independent switch to override DynaDrive operation. This could be particularly handy if using a float switch in a source tank;
  - Allows for remote alarm monitoring;
  - Allows for Daisy chaining dual pumps for the DynaDrive and up to 4 pumps for the DynaDrive PRO.
  - Allows for adjustment of cut-in pressure.

5.2 VSD features

- Auto reset after dry run detected;
- Auto reset after loss of power;
- Option for adapting (volt-free) tank level sensor into programming;
- Control and information panel with LCD screen;
- Includes pressure transducer;
- Under current visual alarm;
- Over current protection by way of shut down and visual alarm;
- Data logging of operation controls and alarms including run duration;
- Aluminum heat exchanger;
- VSD cooling by pump’s fan, lowering cooling costs by way of additional fans;
- Motor and VSD protection from onsite “brown-outs” by way of shut down, visual alarm & auto re-try after correct voltage regained;
- Protection from motor locked rotor by way of auto shut down;
- Adaptable for daisy-chain multiple pumps in parallel, up to 2 pumps;
- Fault diagnosing software for user troubleshooting;
- Adjustable pressure set points via easy to use touchpad in 10kPa (1½psi) increments; and
- 3-minute manual override for priming.

5.3 DynaDrive display layout

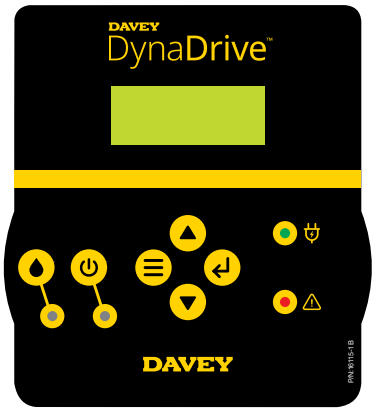

Prime Button

Prime LED
Illuminated when running

Automatic on / manual off button

Automatic LED

Menu button
Illuminated when selected

Enter button

Menu up button

Menu down button

Power LED

Fault LED*

- Using the **Menu up button** or **Menu down button** we can change the values on display.
- Press **Enter button**, for validation.
- Whenever you want to quit the configuration sequence, press **Menu button**.
- After every **Enter button**, DynaDrive will switch to the next menu in the configuration sequence.
- **Prime button** press for the pump to continuously run pump while establishing prime.

* Flashing = Fault requiring reset, Constant = Critical fault

6. OPERATION

IMPORTANT: It should be noted that when the pump is manually turned on, the automated protection built into DynaDrive is overridden. Davey recommends use of the manual override only when absolutely necessary and only for a short time period.

IMPORTANT: When adjusting set pressure, do not exceed the pressure capable of the DynaDrive in the given installation. Reference to AS/NZS 3500/2003 (or local equivalent) should also be considered. When changing the set pressure of DynaDrive, the pressure of the pressure tank must also be adjusted. Refer to section 4.5 pressure tank, of the installation chapter.

6.1 Initial power up

Operation	Screen Display	Display Information	Operational Information
Initial power up	DAVEY VER. 01	Davey (name) Software Version	After power is initially turned on to the DynaDrive, the display shows the software version and the name Davey, see figure 6.1. All LEDs flash for the initial ~ 5 seconds. The Power LED will remain lit green, showing the DynaDrive has power.
Automatic Operation home screen	PSET 400 PACT 0	PSET 400 = Set pressure in kPa PACT 0 = Pressure actual in kPa	The display then reverts to the HOME SCREEN. The power LED will show bright green. The display shows the pre-set pressure on the top line, and pressure being measured by the DynaDrive pressure transducer on the bottom line.
Automatic Operation second screen	PACT 430 HZ 0	PACT = Pressure actual in kPa Hz = Frequency setting	Display only, toggle using arrow keys
Automatic Operation third screen	A 0.0 OC 40	A = Amps oC = Operating temperature	Display only, toggle using arrow keys

6.2 Start-up procedure			
Operation	**Screen Display**	**Display Information**	**Operational Information**
Automatic start up and priming		PSET 400 = Set pressure in kPa PACT 400 = Pressure actual in kPa	Ensure the pump case is primed and connected to the inlet water supply before starting the pump. To start the pump press ⏻ button, the pump will operate until the set pressure (factory 400kPa) is obtained then decrease motor speed coming to a stop. In situations where manual priming is required the priming button 💧 will override the automatic operation and the pump will run at max. rpm until the pump is stopped. Once primed press the start button to return to automatic mode.

6.3 Adjusting the factory set pressure			
Operation	**Screen Display**	**Display Information**	**Operational Information**
"IMPORTANT: WHEN ADJUSTING SET PRESSURE, DO NOT EXCEED THE PRESSURE AS REFERENCED IN AS/NZS3500/2003 (OR LOCAL EQUIVALENT). EXCESSIVE PRESSURE MAY DAMAGE APPLIANCES AND FITTINGS. **When changing the set pressure of DynaDrive, the pressure of the pressure tank must also be adjusted, refer to section 4.5 pressure tank, of the installation chapter."**			
Adjusting the factory set pressure		Current pressure setting to be adjusted in kPa	Ensure the pump is turned off while altering the set pressure. Press and hold the menu button ☰ DD PRO MENU or 5 seconds to enter the pressure adjustment display. Use the arrow keys to alter the pressure up or down 10kPa (5psi) at a time. Once your desired pressure is reached press the enter ↵ or menu button to return to operation display. Restart pressing the automatic button.

6.4 Advance settings DD60-10 & DD90-11			
Operation	**Screen Display**	**Display Information**	**Operational Information**
Adjusting the cut in pressure		PSET = Current pressure set point in kPa PACT = Cut In pressure value in kPa	* Ensure the pump is turned off while altering the cut in pressure. (Refer to section 6.10) * Press and hold the menu and enter button ☰ ↵ for 5 seconds to enter the advance setting menu. * Use the enter key to scroll to the cut in pressure display * Then use the arrow keys ▲ ▼ to set your desired pressure then press the return ↵ or menu button to return to operation display. * Restart pressing the automatic button.
Adjusting the minimum frequency		Minimum frequency Hz = Hertz	* Ensure the pump is turned off while altering the minimum frequency. * Press and hold the menu and enter button ☰ ↵ for 5 seconds to enter the advance setting menu. * Use the enter key to scroll to the minimum frequency display * Then use the arrow keys ▲ ▼ to set your desired frequency then press the return ↵ or menu button to return to operation display. * Restart pressing the automatic button.

6.4 Advance settings DD60-10 & DD90-11			
Operation	**Screen Display**	**Display Information**	**Operational Information**
Connecting an external control switch		Level NO / YES	* Ensure the pump is turned off while altering the level control switch. (Refer to section 6.10) * Press and hold the menu and enter button ☰ ↵ for 5 seconds to enter the advance setting menu. * Use the enter key to scroll to the level display * Then use the arrow keys ▲ ▼ to set level to NO/YES then press the return ↵ or menu button to return to operation display. * Restart pressing the automatic button.
Daisy Chain connection (see Daisy Chain Wiring for connection details)		Type Master = Indicates which pump is the master control and which is the single or slave (slave on models with serial # pre-dating 21100___)	* Ensure the pump is turned off while altering the pump connection status (type). * Press and hold the menu and enter button ☰ ↵ for 5 seconds to enter the advance setting menu. * Use the enter key to scroll to the type display * Then use the arrow keys ▲ ▼ to toggle the type setting then press the return ↵ or menu button to return to operation display. * Repeat the operation for each pump in the chain (2 for DynaDrive / 4 for DynaDrive PRO) * Restart pressing the automatic button.

6.5 Advance settings DD160-19			
Operation	**Screen Display**	**Display Information**	**Operational Information**
Adjusting the cut in pressure		PSET = Current pressure set point in kPa PACT = Cut In pressure value in kPa	* Ensure the pump is turned off while altering the cut in pressure. * Press and hold the menu and enter button ☰ ↵ for 5 seconds to enter the advance setting menu. * Use the enter key to scroll to the cut in pressure display * Then use the arrow keys ▲ ▼ to set your desired pressure then press the return ↵ or menu button to return to operation display. * Restart pressing the automatic button.
Adjusting the minimum frequency		Minimum frequency Hz = Hertz	* Ensure the pump is turned off while altering the minimum frequency. * Press and hold the menu and enter button ☰ ↵ for 5 seconds to enter the advance setting menu. * Use the enter key to scroll to the minimum frequency display * Then use the arrow keys ▲ ▼ to set your desired frequency then press the return ↵ or menu button to return to operation display. * Restart pressing the automatic button.

6.5 Advance settings DD160-19			
Operation	**Screen Display**	**Display Information**	**Operational Information**
Adjusting the minimum pressure		Minimum pressure kPa - kilopascals	* Ensure the pump is turned off while altering the minimum pressure. * Press and hold the menu and enter button ☰ ↵ for 5 seconds to enter the advance setting menu. * Use the enter key to scroll to the minimum pressure display * Then use the arrow keys ▲ ▼ to set your desired pressure then press the return ↵ or menu button to return to operation display. * Restart pressing the automatic button.
Adjust the time / pressure minimum setting		Minimum time before low pressure alarm triggers. Time in seconds (This does not appear if Press is NO)"	* Ensure the pump is turned off while altering the time/ pressure. * Press and hold the menu and enter button ☰ ↵ for 5 seconds to enter the advance setting menu. * Use the enter key to scroll to the time/pressure display * Then use the arrow keys ▲ ▼ to set your desired time then press the return ↵ or menu button to return to operation display. * Restart pressing the automatic button.

6.5 Advance settings DD160-19			
Operation	**Screen Display**	**Display Information**	**Operational Information**
Connecting an external control switch		Level NO / YES	* Ensure the pump is turned off while altering the level control switch. * Press and hold the menu and enter button ☰ ↵ for 5 seconds to enter the advance setting menu. * Use the enter key to scroll to the level display * Then use the arrow keys ▲ ▼ to set level to NO/YES then press the return ↵ or menu button to return to operation display. * Restart pressing the automatic button.
Switching to allow multiple pumps to connect		Multiple pump mode NO/YES	* Ensure the pump is turned off while altering the multi pump mode. * Press and hold the menu and enter button ☰ ↵ for 5 seconds to enter the advance setting menu. * Use the enter key to scroll to the multi pump display * Then use the arrow keys ▲ ▼ to set your desired mode then press the return ↵ or menu button to return to operation display. * Restart pressing the automatic button.

6.5 Advance settings DD160-19			
Operation	**Screen Display**	**Display Information**	**Operational Information**
Setting number of additional pumps		Number of Channels (additional pumps) 1-4 (this does not appear if MULTI is NO)	* Ensure the pump is turned off while altering the pump channel number. * Press and hold the menu and enter button ☰ ↲ for 5 seconds to enter the advance setting menu. * Use the enter key to scroll to the type display * Then use the arrow keys ▲ ▼ to toggle the type setting then press the return ↲ or menu button to return to operation display. * Repeat the operation for each pump in the chain setting 1 through 4 * Restart pressing the automatic button.
MODBUS Comms number	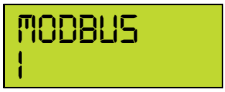	MODBUS Communication. 1-127	* Refer to Davey DynaDrive PRO service manual available through your Davey Dealer

6.6 Operational data displays DD60-09, DD90-11 & DD160-19		
Screen Display	**Display Information**	**Operational information**
	Running Hours	* Press and hold the menu and up arrow key for 5 seconds to enter the advance setting menu. * Use the enter key to scroll to the level display. * Refer to Troubleshooting section for fault codes.
	Number of cycles	
	Switch Events	
	Dry Run Events	
	Temperature Events	
	Over Current Events	
	Short Circuit Events	
	High Voltage Events	
	Under Current Events	
	Minimum Pressure Events	

6.7 Extra draw-off capacity

The DynaDrive has a pressure tank included as part of the system which will accommodate small leaks. In some applications it may be appropriate to install an additional (or larger) accumulator (pressure tank) capacity. These applications include:

- Long suction lines;
- Low flow appliances connected to the pump, such as evaporative air conditioners, slow filling toilet cisterns, where flows can be a little as 0.5L/min (0.13gpm).

Any additional accumulators can be installed downstream of the controller (ie. between the controller and the first outlet). Where extra draw-off capacity is utilised the additional pressure tank should have a pre-charge 70% of the system set pressure. For installations requiring flow rates above 125L/min (33 – 132gpm), it is common for the DynaDrive to run continuously. If this occurs, adjust up the min frequency setting (refer section 6.6) and install a larger pressure tank. If you have any further concerns, please contact your local Davey representative.

6.8 Decommissioning the DynaDrive

Should it become necessary to decommission the DynaDrive to relocate the it, store it, or conduct some service maintenance for example:

- Turn off the power to the DynaDrive and unplug it from electrical supply;
- Close any isolation valves on the suction side of the pump;
- Open a tap, or outlet on the delivery side of the pump and discharge excess pressure in the line;
- Close any isolation valves on the delivery side of the pump;



ATTENTION: It is essential that the system is de-pressurized before proceeding. Failure to do so could result in harm to product and/or user.

- Unscrew the pressure tank from the top of the DynaDrive discharge/delivery outlet. NOTE: depending on the installation it is possible that water may spill from the pipework and pressure tank. It would be good practice to prepare for this;
- Unscrew pipework from the DynaDrive discharge/delivery outlet;
- Unscrew pipework from the DynaDrive suction inlet;
- Slide DynaDrive out of location.

6.9 Input connections for Daisy Chain / Pressure Sensor / Level (Float) switch. (DD60-10 & DD90-11)

DynaDrive has the ability to be overridden by a separate switch. This may be of benefit if using a float switch on a source tank (eg rainwater tank). To wire in an independent switch, refer to figures below.

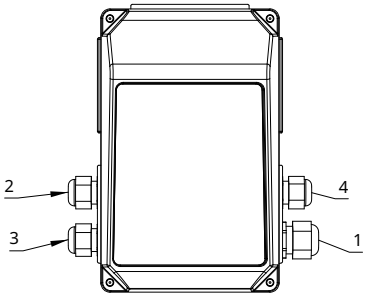

1	Power supply 240V / 110V
2	(Factory) Pressure sensor 4-20mA
3	General input / output
4	General input / output

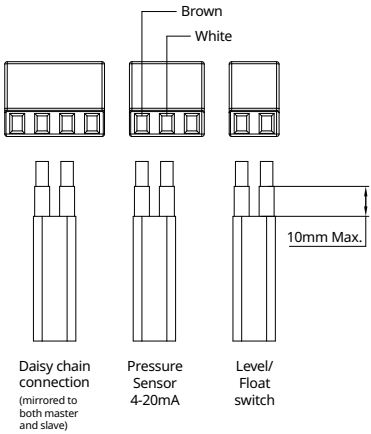

Daisy chain wiring configuration

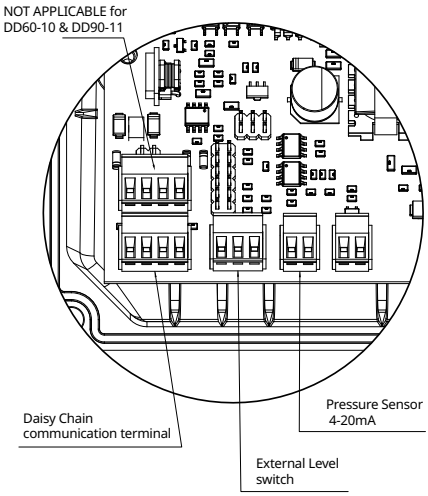

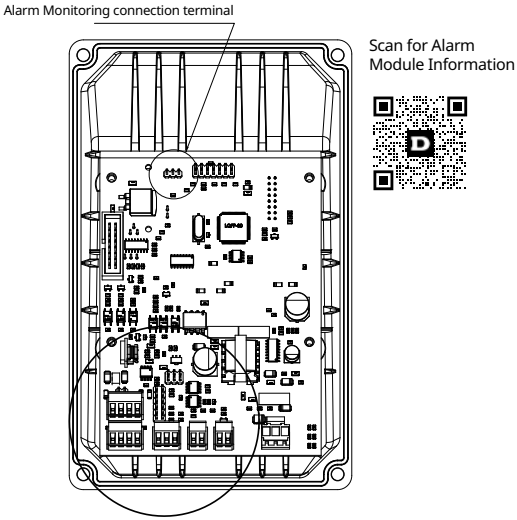

6.10 Input connections for Daisy Chain / Pressure Sensor / Level (Float) switch. (DD160-19)

DynaDrive has the ability to be overridden by a separate switch. This may be of benefit if using a float switch on a source tank (eg rainwater tank). To wire in an independent switch, refer to figures below.

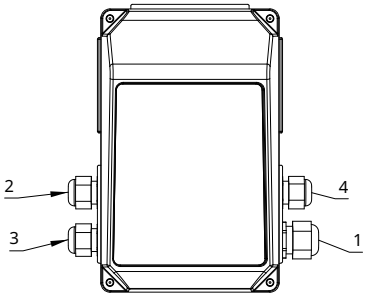

1	Power supply 240V / 110V
2	(Factory) Pressure sensor 4-20mA
3	General input / output
4	General input / output

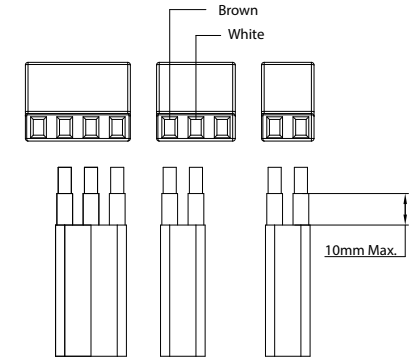

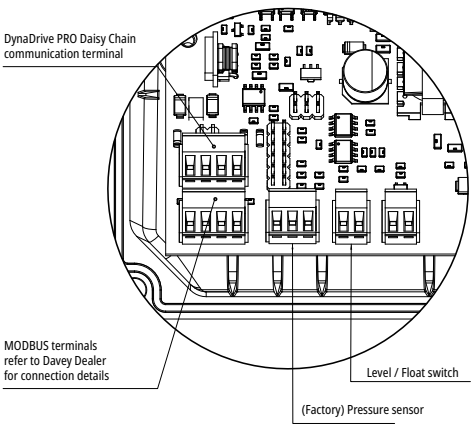

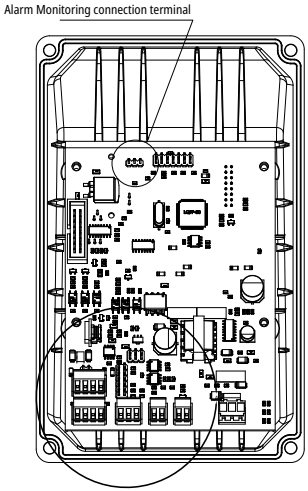

Scan for Alarm Module Information

Daisy chain wiring diagram

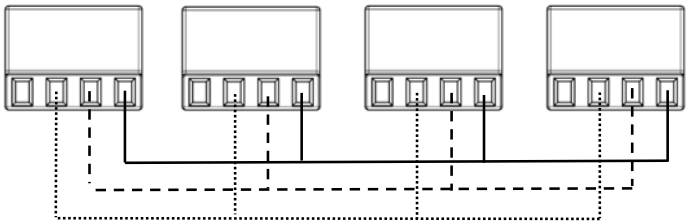

6.11 Daisy-chain multiple DynaDrive systems (DD60-10 & DD90-11)

It is possible to run two DynaDrive pumps in parallel, with a shared discharge line. This can be particularly useful in applications where the system's maximum flow rate can be significantly higher than the system's minimum flow rate. For example: if DynaDrive needed a flow rate demand of up to 140L/min (37 gallons/min) at a pressure of 400kPa. Running two DynaDrive DD90-11 systems in parallel with common discharge would accommodate this. One DynaDrive would be designated as the MASTER, with the remaining DynaDrive designated as a SLAVE. When making changes to settings in the system, only the LEAD can be adjusted.

On initial startup, the DynaDrive designated as the MASTER will be the first pump to start. The SLAVE DynaDrive will come on if the first pump is unable to maintain set pressure, even when running at 100% speed. The next time water is in demand, the SLAVE pump will come on first. This sequence is referred to as auto-rotate. To wire up the MASTER and SLAVE pump, refer to section 6.10/6.11 Input connections.

To set the Controller to recognise the daisy chain configuration:

- Ensure **automated control** is turned off. To turn the automated control off, push the **Automatic on / manual off button**.
- The green **Automatic LED** will turn off, see figure in section 6.1;
- Once the motor has slowed to a stop, press and hold the **Menu button** and **Enter button** for ~ 5 seconds. The display will change to show your current set pressure, see figure in section 6.4;
- If the controls are untouched for ~ 30 seconds, the menu will revert back to normal display;
- Using the **Menu up** button and **Menu down** button scroll through to TYPE;
- Use the **Menu up** button and **Menu down** button to change the setting from SINGLE to MASTER;
- Press the **Enter button** to save settings and return to the HOME SCREEN;
- Repeat this process with the other pump in the system, selecting "SINGLE" ("slave" on models with serial # pre-dating 21100_ _ _);
- Now restart automatic operation by pressing **Automatic on / manual off button**.

6.12 Daisy-chain multiple DynaDrive systems (DD160-19)

It is possible to connect up to 4 DynaDrive Pro pumps together in a daisy chain configuration, just as with the smaller DynaDrive units.

This allows for a duty/assist - standby configuration which will cover a wise variety of applications.

One DynaDrive would be designated as the MASTER, with the remaining DynaDrive PROs designated as a SLAVE. When making changes to settings in the SLAVES, only the CHANNEL 1 settings can be adjusted.

On initial startup, the DynaDrive PRO designated as the CHANNEL 1 will be the first pump to start. The CHANNEL 2/3/4 DynaDrive PRO will come on if the first pump is unable to maintain set pressure, even when running at 100% speed. The next time water is in demand, the CHANNEL 2 pump will come on first and then cycle through all channels each start. This sequence is referred to as auto-rotate. To wire up the CHANNEL 1 and CHANNEL 2/3/4 pump, refer to section 6.11 Input connections.

NOTE: by adjusting the CUT IN pressure of the pumps the starting time for other channels can be adjusted.

To set the Controller to recognise the daisy chain configuration:

- Ensure **automated control** is turned off. To turn the automated control off, push the **Automatic on / manual off button**.
- The green **Automatic LED** will turn off, see figure in section 6.1;
- Once the motor has slowed to a stop, press and hold the **Menu button** and **Enter button** for ~ 5 seconds. The display will change to show your current set pressure, see figure in section 6.4;
- If the controls are untouched for ~ 30 seconds, the menu will revert back to normal display;
- Using the **Menu up** button and **Menu down** button scroll through to MULTIPUMP;
- Use the **Menu up** button and **Menu down** button to change the setting from 1 to 4;
- Press the **Enter button** to save settings and return to the HOME SCREEN;
- Repeat this process with the other pump in the system, selecting either 2,3 or 4 for each pump
- Now restart automatic operation by pressing **Automatic on / manual off button**.

7. MAINTENANCE



ATTENTION: Automatic resets may allow the pump to restart without warning. Always disconnect the pump motor from the electrical supply before maintenance or repairs. When servicing or attending pump and/or controllers, always ensure power is switched off and lead unplugged. Electrical connections should be serviced only by qualified persons. If the electrical supply lead of this pressure system is damaged, it must be replaced by the manufacturer, or an appointed representative. Under no circumstances should the DynaDrive be disassembled by other than qualified tradespersons. Failure to observe this warning may expose persons to the possibility of personal injury and may also result in damage to other property. Do not dismantle spring under pressure.



IMPORTANT: Do not use hydrocarbon based or hydrocarbon propelled sprays around the electrical components of this pump. During servicing, use only approved, non-petrochemical based o-ring and gasket lubrication. If unsure, consult your Davey representative for advice. For protection, DynaDrive monitors input current and will shut down the pump motor in the event of an over load.

7.1 Periodic pressure tank checks

Depending on the quality of the pumped water, from time to time your tank may require flushing to remove settled fines such as mud or sand. If sand, or mud can stay in the tank it will accelerate wear on the internal lining and shorten your tanks life. Safely disconnect the tank from the water supply, discharge all air from the tank and flush the tank several times with clean water. Once the flushing water is clean, reconnect the tank and recharge the air as described in the pressure tank section of the installation chapter.

A tank in good order will not leak, but over time due to damage through rough handling, impacts or grit and/or impurities in the water the tank shell may fail and/or leak. Should the tank leak or show signs of possible failure the tank should be immediately disconnected and replaced.

Pressure tank to be maintained at 70% of set pressure (Ie. 280kPa for set pressure of 400kPa).

8. TROUBLESHOOTING

Alarm	Description	Symptoms	Potential Solution	Alarm Module Triggered
A1 DRY RUN	Dry Run without Sensor	• Fault light flashes on DynaDrive Controller • "A1 DRY RUN" displayed on DynaDrive display; • DynaDrive attempts restart after 5 minutes; • DynaDrive attempts restart in 30 minutes intervals, for 25 hours; • DynaDrive then reverts to solid alert with no further retry.	DynaDrive has run dry or lost prime. To protect itself, DynaDrive has switched off. Before trying to restart: turn off the DynaDrive for 30 seconds; ensure the pump has cooled down (if hot); then restart as per section 6 of this manual. If problem persists, contact your Davey Dealer.	YES
A2 OVER CURRENT	Over Current	• "A2 OVERCURR" displayed on screen • Alarm light flashes • Alarm light solid after 4x failed restarts	Pump will reattempt to start 3x times after 10 seconds Pump will go into FINAL FAILURE mode after 4 unsuccessful restarts"	YES
A3	Motor Disconnect	• Pump will not start	Contact Davey Dealer	NO
A4 LOW WAT.	Dry Run with float sensor	• "A4 LOW WAT." displayed on controller • Flashing alarm light • Low water supply	The device has external input that if it is configured as "LEVEL" will activate this alarm. The pump will shut down until the state of level is rectified.	NO
A5 P. SENSOR	Sensor Disconnection & Failure	"*""A5 P.SENS"" displayed on controller *Flashing alarm light *Cable physically disconnected	Transducer is disconnected from the Drive. Reconnect the pressure transducer to the quick connect cable attached to the pump.	YES
A6 TEMPERAT	Over Temperature	• "A6 OVER TEMP" displayed on controller • Flashing alarm light	DynaDrive has detected high temperature inside controller. To protect itself, DynaDrive has switched off. Before trying to restart: turn off the DynaDrive for 30 seconds; ensure the pump has cooled down (if hot); then restart as per section 6 of this manual. If problem persists, contact your Davey Dealer.	YES

Alarm	Description	Symptoms	Potential Solution	Alarm Module Triggered
A7 SHORTCIR	Short circuit & Locked Rotor	• "A7 SHORTCIR" displayed on controller • The pump will attempt 4 sucessive restarts • The pump will go into FINAL FAILURE mode on 4th unsuccessful restart attempt	The device has an electronic system for protection against short circuits as well as peaks of current. The pump will attempt 4 restarts before entering FINAL FAILURE mode. Check the pump, if the problem persists, contact your Davey Dealer.	YES
A8 OVERVOLT	Over Voltage +10%	• "A8 OVERVOL" appears on controller display • Flashing alarm light	DynaDrive has detected high voltage. To protect itself, DynaDrive has switched off. Before trying to restart: turn off the DynaDrive for 30 seconds; ensure the pump has cooled down (if hot); then restart as per section 6 of this manual. If problem persists, contact your Davey Dealer.	YES
A9 UNDERVOLT	Under Voltage -20%	• "A9 UNDERVOL" appears on controller display • Flashing alarm light	DynaDrive has detected low voltage, or high current draw. To protect itself, DynaDrive has switched off. Before trying to restart: turn off the DynaDrive for 30 seconds; ensure the pump has cooled down (if hot); then restart as per section 6 of this manual. If problem persists, contact your Davey Dealer.	YES
A13 PRES.MIN	Min Pressure	• "A13 MIN.PRESS" appears on controller • Flashing alarm light	Optional alarm (see advanced settings menu). When activated a minimum pressure level can be set to advise if any adverse conditions are observed. Pump will require manual restart. FINAL FAILURE	YES
N/A	Display screen blank	• No information displayed or screen not illuminated	DynaDrive communication failure. Refer to section 7.4 of this manual to check connections and settings. If problem persists, contact your Davey Dealer.	NO
N/A	Pumps not operating in Daisy chain	• Daisy chained pumps operating as individual pumps.	DynaDrive communication failure. Refer to section 7.4 of this manual to check connections and settings. If problem persists, contact your Davey Dealer.	NO

NOTE: Flashing alarm light = Pump will attempt restart or can be reset, Solid alarm light, pump will need service or repair

9. SPARE PARTS

Models and Exploded View

DynaDrive 6 stages	**DD60-10(CE)**
DynaDrive 5 stages	**DD90-11(CE)**

Notes: A. 2nd Stage body comes with air valve assy which can be retrofitted onto models without the air valve. Subsequent stage bodies have the air hole which can also be retrofitted onto models that do not have the air valve already fitted.
B. Washer cup part number 13666 - quantity of 1 required for DD60-10 & DD90-11 models (fitted to drive end side only).
C. Tank is optional extra for CE model variants

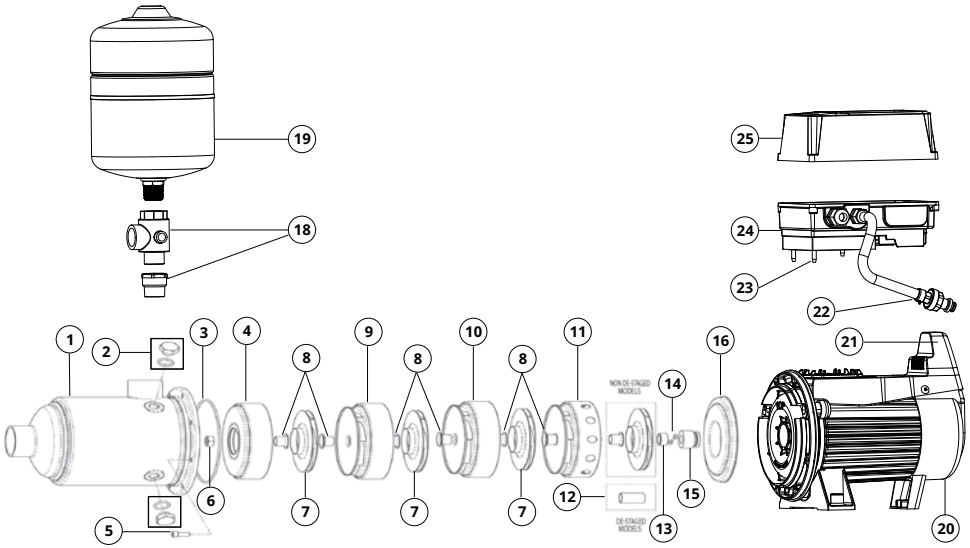

Scan for further spare parts information

NOTES

NOTES

10. Davey Warranty

Davey Water Products Pty Ltd (Davey) warrants all products sold will be (under normal use and service) free of defects in material and workmanship for a minimum period of one (1) year from the date of original purchase by the customer as marked on the invoice, for specific warranty periods for all Davey products visit daveywater.com.

This warranty does not cover normal wear and tear or apply to a product that has:

- been subject to misuse, neglect, negligence, damage or accident
- been used, operated or maintained other than in accordance with Davey's instructions
- not been installed in accordance with the Installation Instructions or by suitably qualified personnel
- been modified or altered from original specifications or in any way not approved by Davey
- had repairs attempted or made by other than Davey or its authorised dealers
- been subject to abnormal conditions such as incorrect voltage supply, lightning or high voltage spikes, or damages from electrolytic action, cavitation, sand, corrosive, saline or abrasive liquids,

The Davey warranty does not cover replacement of any product consumables or defects in products and components that have been supplied to Davey by third parties (however Davey will provide reasonable assistance to obtain the benefit of any third-party warranty).

To make a warranty claim:

- If the product is suspected of being defective, stop using it and contact the original place of purchase. Alternatively, phone Davey Customer Service or send a letter to Davey as per the contact details below
- Provide evidence or proof of date of original purchase
- If requested, return the product and/or provide further information with respect to the claim. Returning the product to the place of purchase is at your cost and is your responsibility.
- The warranty claim will be assessed by Davey on the basis of their product knowledge and reasonable judgement and will be accepted if:
  - a relevant defect is found
  - the warranty claim is made during the relevant warranty period; and
  - none of the excluded conditions listed above apply
- The customer will be notified of the warranty decision in writing and if found to be invalid the customer must organise collection of the product at their expense or authorise its disposal.

If the claim is found to be valid Davey will, at its option, repair or replace the product free of charge.

The Davey warranty is in addition to rights provided by local consumer law. You are entitled to a replacement or refund for a major failure and compensation for any other reasonably foreseeable loss or damage. You are also entitled to have the goods repaired or replaced if the goods fail to be of acceptable quality and the failure does not amount to a major failure.

For any internet connected products the consumer is responsible for ensuring a stable internet connection. In the event of a network failure the consumer will need to address the concern with the service provider. Use of an App is not a substitute for the User's own vigilance in ensuring the product is working to expectation. Use of a Smart Product App is at the User's own risk. To the fullest extent permitted by law Davey disclaims any warranties regarding the accuracy, completeness or reliability of App data. Davey is not responsible for any direct or indirect loss, damage or costs to the User arising from its reliance on internet connectivity. The User indemnifies Davey against any claims or legal actions from them or others relying on internet connectivity or App data may bring in this regard.

Products presented for repair may be replaced by refurbished products of the same type rather than being repaired. Refurbished parts may be used to repair the products. The repair of your products may result in the loss of any user-generated data. Please ensure that you have made a copy of any data saved on your products.

To the fullest extent permitted by law or statute, Davey shall not be liable for any loss of profits or any consequential, indirect or special loss, damage or injury of any kind whatsoever arising directly or indirectly from Davey products. This limitation does not apply to any liability of Davey for failure to comply with a consumer guarantee applicable to your Davey product under local laws and does not affect any rights or remedies that may be available to you under local laws.

For a complete list of Davey Dealers visit our website (daveywater.com) or call:

DAVEY

Davey Water Products Pty Ltd
A member of the Waterco Group
ABN 18 066 327 517

daveywater.com

AUSTRALIA

Head Office
6 Lakeview Drive,
Scoresby, Australia 3179
Ph: 1300 232 839
Fax: 1300 369 119
Email: sales@daveywater.com

NEW ZEALAND

7 Industry Road,
Penrose, Auckland 1061
Ph: 0800 654 333
Fax: 0800 654 334
Email: sales@dwp.co.nz

EUROPE

7 rue Eugène Hénaff 69200
Vénissieux, France
Ph: +33 (0) 4 72 13 95 07
Email: info@daveyeurope.eu

NORTH AMERICA

Ph: 1-888-755-8654
Email: info@daveyusa.com

MIDDLE EAST

Ph: +971 50 6368764
Fax: +971 6 5730472
Email: info@daveyuae.com

® Davey is a trademark of Davey Water Products Pty Ltd. © Davey Water Products Pty Ltd 2025.