Davey Repair or Replacement Guarantee

In the unlikely event in Australia or New Zealand that this Davey product develops any malfunction within two years of the date of original purchase due to faulty materials or manufacture, Davey will at our option repair or replace it for you free of charge, subject to the conditions below.

Should you experience any difficulties with your Davey product, we suggest in the first instance that you contact the Davey Dealer from which you purchased the Davey product. Alternatively you can phone our Customer Service line on 1300 367 866 in Australia, or 0800 654 333 in New Zealand, or send a written letter to Davey at the address listed below. On receipt of your claim, Davey will seek to resolve your difficulties or, if the product is faulty or defective, advise you on how to have your Davey product repaired, obtain a replacement or a refund.

Your Davey Two Year Guarantee naturally does not cover normal wear or tear, replacement of product consumables (i.e. mechanical seals, bearings or capacitors), loss or damage resulting from misuse or negligent handling, improper use for which the product was not designed or advertised, failure to properly follow the provided installation and operating instructions, failure to carry out maintenance, corrosive or abrasive water or other liquid, lightning or high voltage spikes, or unauthorised persons attempting repairs. Where applicable, your Davey product must only be connected to the voltage shown on the nameplate.

Your Davey Two Year Guarantee does not cover freight or any other costs incurred in making a claim. Please retain your receipt as proof of purchase; you **MUST** provide evidence of the date of original purchase when claiming under the Davey Two Year Guarantee.

Davey shall not be liable for any loss of profits or any consequential, indirect or special loss, damage or injury of any kind whatsoever arising directly or indirectly from Davey products. This limitation does not apply to any liability of Davey for failure to comply with a consumer guarantee applicable to your Davey product under the Australian or New Zealand legislation and does not affect any rights or remedies that may be available to you under the Australian or New Zealand Consumer Legislation.

In Australia, you are entitled to a replacement or refund for a major failure and for compensation for any other reasonably foreseeable loss or damage. You are also entitled to have the goods repaired or replaced if the goods fail to be of acceptable quality and the failure does not amount to a major failure.

Should your Davey product require repair or service after the guarantee period; contact your nearest Davey Dealer or phone the Davey Customer Service Centre on the number listed below.

For a complete list of Davey Dealers visit our website (davey.com.au) or call:

DAVEY

Davey Water Products Pty Ltd
Member of the GUD Group
ABN 18 066 327 517

AUSTRALIA

Customer Service Centre
6 Lakeview Drive,
Scoresby, Australia 3179
Ph: 1300 232 839
Fax: 1300 369 119
Email: sales@davey.com.au
Website: davey.com.au

NEW ZEALAND

Customer Service Centre
7 Rockridge Avenue,
Penrose, Auckland 1061
Ph: 0800 654 333
Fax: 0800 654 334
Email: sales@dwp.co.nz
Website: daveynz.co.nz

® Davey is a registered trademark of Davey Water Products Pty Ltd. © Davey Water Products Pty Ltd 2017.

P/N 48532-9

*** Installation and operating instructions are included with the product when purchased new. They may also be found on our website.**

DAVEY

DEEP WELL PRESSURE PUMPS & SYSTEMS

MODELS: 95D, 125D, 165D

Installation and Operating Instructions

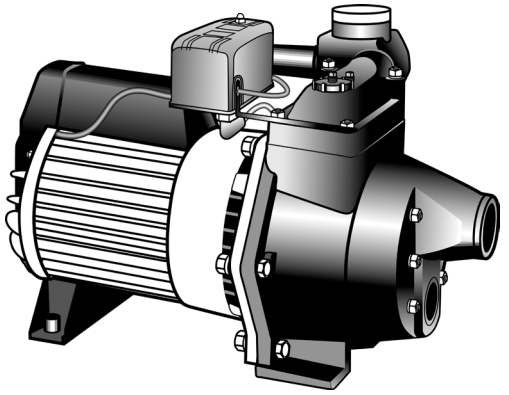

PLEASE READ IMPORTANT CAREFULLY

Please pass these instructions on to the operator of this equipment.

Prior to using this pump you must ensure that:

- The pump is installed in a safe and dry environment
- The pump enclosure has adequate drainage in the event of leakage
- Any transport plugs are removed
- The pipe-work is correctly sealed and supported
- The pump is primed correctly
- The power supply is correctly connected
- All steps have been taken for safe operation

Appropriate details for all of these items are contained in the following Installation and Operating Instructions. Read these in their entirety before switching on this pump. If you are uncertain as to any of these Installation and Operating Instructions please contact your Davey dealer or the appropriate Davey office as listed on the back of this document.

Summary of Installation Procedure

For Automatic Operation as a Pressure System with Supercell Pressure Tank

1. Securely bolt pump to wooden, metal or concrete base, adjacent to bore, as shown in illustration, to allow suction pipework to be installed directly down bore. Alternatively, for offset installations, when pump is not directly adjacent to bore, pump may be positioned on a firm base without securing.
2. For base mounted tanks place tank next to pump and connect tank hose to bottom connection of pressure regulating valve, after removing cap. If using the Davey Tank connection kit you need only tighten **by hand** (no sealant required). Use of pipe wrench is not required and should be avoided.

For top mounted tanks a Davey three way tee piece is required (P/No 48638). This is fitted to the priming hole, and the tank is screwed into the top of the tee.

3. Fit a gate valve to the $1^{1}/_{4}$" BSP outlet at the pressure regulating valve.
4. Prepare injector, connecting lengths of polythene pipe of the correct size to the venturi tube and injector body.

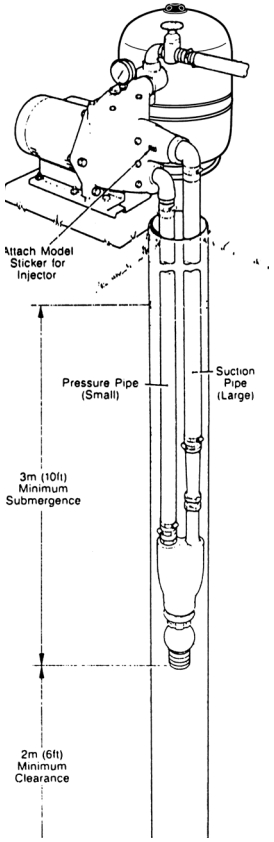

Trouble Shooting continued...

6. Pump Not Switching Off or Taking Too Long to Switch Off
   May be caused by one or more of the following:-
   a) Voltage supply too low;
   b) Blocked jet or venturi;
   c) Leak in discharge pipe or fitting, taps etc.;
   d) Worn or blocked pump components, impeller, casing etc.;
   e) Drop in water level in water supply source.

***NOTE: For protection, the Davey pump motors are fitted with an automatic reset thermal overload, constant tripping of this overload indicates a problem e.g. low voltage at pump, excessive temperature (above 50°C) in pump enclosure.**

WARNING: Automatic reset thermal overloads will allow the pump to restart without warning. Always disconnect the pump motor from the electrical supply before maintenance or repairs.

WARNING: When servicing or attending pump, always ensure power is switched off and lead unplugged. Electrical connections should be serviced only by qualified persons.

Care should also be taken when servicing or disassembling pump to avoid possible injury from hot pressurised water. Unplug pump, relieve pressure by opening a tap on the discharge side of the pump and allow any hot water in the pump to cool before attempting to dismantle.

IMPORTANT: DO NOT USE petroleum based fluids or solvents (e.g. Oils, Kerosene, Turpentine, Thinners, etc) on the plastic pump components or seal components.

WARNING: Do not use hydrocarbon based or hydrocarbon propelled sprays around the electrical components of this pump.

In accordance with AS 3350.2.41 we are obliged to inform you that this pump is not to be used by children or infirm persons and must not be used as a toy by children.

Trouble Shooting

1. Pump not Delivering Water or not Building Up Pressure
   May be caused by one or more of the following:-
   a) Pump not properly primed;
   b) Foot valve leaking;
   c) Deep Well injector not installed below water level;
   d) Suction lift too high;
   e) Suction piping not correctly sealed or holed allowing air to enter pump suction;
   f) Blocked jet or venturi;
   g) Piping connected in reverse, ie suction and pressure pipes transposed;
   h) Motor thermal overload tripping - refer No 4;
   i) Insufficient water supply at source;
   j) Pressure system not switching on due to static delivery head causing higher pressure on the pump than the pressure switch cut-in setting.

2. Pump not Operating at Minimum Operating Pressure for Deep Well injector
   May be caused by air leaks in suction pipe or
   ADR control not correctly set.

3. Motor not running
   May be caused by one or more of the following:-
   a) Power failure;
   b) Blown fuse;
   c) Motor overload tripping;
   d) Motor windings faulty.

4. Motor Thermal Overload Tripping
   May be caused by one or more of the following:-
   a) Low voltage supply;
   b) Motor or pump seized;
   c) Motor windings faulty.

5. Pump Switching On and Off Frequently or When No Taps Turned On
   May be caused by one or more of the following:-
   a) Foot valve not retaining pressure or water;
   b) Water leaking from suction or delivery piping;
   c) Faulty ball valve in toilet cistern, hot water system, or stock troughs allowing unit to over-flow;
   d) Pressure tank not retaining air pressure or air charge too high;
   e) Motor thermal overload tripping.

5. Remove suction cover from pump and screw elbows supplied with Deep Well Injector into cover, ensuring that an air tight seal is achieved. Use ample thread seal tape. Fit polythene pipes onto elbows, again ensuring that no air leaks exist. “Silastic” used in joints between pipes and connectors will assist in sealing.
6. Lower injector into bore and re-attach suction cover to pump with rubber gasket, evenly tightening cover retaining nuts.
7. Attach injector model label (supplied with Injector Kit) to pump suction cover as shown.
8. Connect outlet piping at gate valve.
9. Fit pressure gauge (supplied with pump) at top of pump as indicated on illustration.

For Manual Operation (i.e. without pressure tank)
Follow procedure as above, except no pressure tank fitted as described under (2). Remove pressure switch tube from regulating valve and plug connection hole with fitting supplied.

Housing your Pump

As the pump is an electrical apparatus, it must be protected from the weather, at the same time adequate ventilation must be provided for the motor.



Do not enclose the pump in such a manner that a “Hotbox” condition is created. Ventilation should be provided near the top of any enclosure to prevent a buildup of condensation.

Your pump should be securely bolted to a firm base, high enough to prevent any surface water that may accumulate from coming into contact with the unit. Positioning of the unit should allow the nameplate to be easily read, and provide adequate access for service purposes.



The power outlet may need to be provided by an electrician in a safe, dry place (possibly within the weather proof enclosure).



WARNING: Some insects, such as small ants, find electrical devices attractive for various reasons. If your pump enclosure is susceptible to insect infestation you should implement a suitable pest control plan.

Water Quality

Your Davey pump is made from food safe materials, and tested using sanitised water. Davey has no control over your pump once it leaves our warehouse. For potable (drinking) water applications we recommend that you flush the pump with clean water prior to use.

Installation Procedure

The Deep Well Injector Kit comprises a bronze injector and foot valve assembly which is attached to the end of polythene piping and lowered into the water. Deep well injector kits include all appropriate fittings for connection of pipes to pump.

Suction Piping for use on Deep Well Injectors

All Deep Well Injectors require two pipes to be connected between the pump and the injector, the larger being the suction pipe and the smaller the pressure pipe. Pipe sizes are according to the table below (except where special sizes may be specified for a particular installation - consult your Davey Dealer or Davey Customer Service Centre).

Deep Well Injector Kit No.	**Suction and Pressure Pipe Sizes**
22469, 22470, 22471, 22472.	
22473, 22474, 22475	1 1/2"and 1 1/4"
22570, 22571, 22572, 22573	2" and 1 1/2"

Polythene piping is recommended. Select the grade of pipe which has a pressure rating equal to the pump max. pressure and the depth to water. Normally rural class B polypipe is ample. If higher rating pipe is required, consult your Davey dealer.

Plumbing of Deep Well Injectors

A minimum submergence of 3m (10 ft.) is required for the injector and foot valve assembly for correct operation.

When water is pumped out from a borehole it is common for the water level in the bore to drop. However, there is usually a point at which the bore water level remains static or constant for a given maximum flow from the bore. This new level is known as the 'draw down level' of the bore. It is necessary to establish this draw down level and the output capacity of the bore at this level before installing a pump on the bore.

Once the pump has been installed on the bore, it is necessary to regulate the flow from the pump to ensure it does not exceed the maximum capacity of the bore at the draw down level. Refer Automatic Demand Response (ADR) Set Up Instructions.

! The minimum submergence of the injector and foot valve assembly of 3m (10 ft) means the length of piping required from the top of the bore to injector assembly is equal to the draw down level plus 3m (10 ft). Furthermore, ensure that at least a 2m (6 ft) clearance exists between the injector assembly and the bottom of the bore.

With the adjustment screw on the ADR valve adjusted fully out, run the pump until the bore is pumped down to its 'draw down' level, whilst the pump outlet is allowing water to discharge unimpeded.

Maintain the pump pressure at this level using gate valve.

Screw regulating valve adjustment screw in until pressure starts to rise. Open gate valve a little further, then readjust regulating valve to maintain required minimum pressure on gauge When gate valve is fully open and regulating valve is maintaining operating pressure, adjustment is complete. Your pump will now resist operating in a loss of prime condition, but also optimise it's performance at higher pressures. If pump is allowed to operate below the minimum on the table below, cavitation will occur which causes excessive pump wear, or prime may be lost.

Deep Well Injector	Minimum Operating Pressure		Max Shut-off Pressure	
Model	kPa	psi	kPa	psi
22469	200	29	550	80
22470	195	28	645	93
22471	220	32	575	83
22472	235	34	660	96
22473	160	23	620	90
22474	240	35	635	92
22475	240	35	750	109
22570	230	33	650	94
22571	170	25	590	86
22572	230	33	630	91
22573	240	35	540	78

Once set there should be no need to alter the setting of the ADR valve, unless there is a major change with the installation.

! Always operate the pump at or above the minimum operating pressure. Failure to do so will result in pump damage not covered by guarantee.

To Check for Correct Automatic Pressure System Operation

1. Close gate valve at pump outlet, allowing pump to run and build up pressure until it switches off at cut-out setting of pressure switch (factory setting of 350kPa).
2. Open gate valve at pump outlet to allow water to discharge to an outlet point. Pump will automatically switch on at cut-in setting of pressure switch (factory setting of 210kPa).

Power connections and wiring must be carried out by an Authorised Electrician.

Pressure Switch Setting

All Deep Well Models have a factory-set pressure switch cut-in of 210 kPa, and 350 kPa, cut-out. The switch settings may require adjustment to provide the best constant performance, reducing pump cycling to a minimum. This work may require the assistance of an experienced pump installer.

Pressure Tank Pre-Charge

The Davey Supercell Pressure Tank requires the correct pre-charge of air for satisfactory operation. This pre-charge of air is determined by the cut-in pressure switch setting required for the particular system purchased. This pressure must be adjusted prior to operation of the system to 195kPa (28 psi) which is the correct pre-charge for Deep Well pressure switch setting of 210 — 350 kPa. If higher operating pressures are required, the tank pressure must be set to 15kPa (2psi) below the cut-in switch. Adjust this pre-charge before operating the pressure system. This pre-charge pressure may be checked using a standard automotive type tyre pressure gauge.

Operating the Pump

1. Close gate valve (in outlet piping).
2. Remove priming plug and fill pump body and suction pipes with water by pouring water into the priming port on top of the pump until suction pipes and pump are completely full. Allow air bubbles to come to top of casing. Continue topping-up as air bubbles come out. For long 'offset' installations, it is recommended that an engine powered pump be used to fill suction pipes. Riser pipes installed at high points in both suction pipes may be necessary to 'bleed' out air fully. Ensure all fitting and caps are air tight.
3. Replace priming plug and switch on pump.
4. Crack gate valve at pump outlet to expel trapped air. When pump primes, pressure gauge reading will climb to over 350kPa. It may be necessary to switch off and top up pump and pipes with water several times to expel all air in the system and gain prime.
5. Once prime is established, open gate valve slowly. A strong flow of water should be evident at an outlet tap indicating pump is functioning.

Automatic Demand Response (ADR) - setting up instructions

Deep Well Installations require a certain minimum pump pressure to operate satisfactorily (See Table).

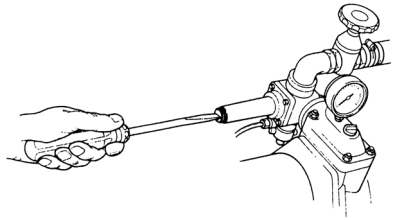

Having established the length of the piping required for attachment to the injector, connect the injector assembly making sure that the larger pipe is fitted to the long venturi tube of the injector.

Use 2 hose clips on each pipe connection with worm drives facing but on opposite sides of pipe, and tighten securely. It may be necessary to heat the polythene piping slightly before pushing it on to the hose tails. At the other end of the suction pipes (top of bore end), remove the suction cover from the pump and fit it to the piping using the elbow connectors provided with the injector housing kit.

Ensure joints are air tight, thread seal tape or pipe joining compound is essential. Securely tighten 2 hose clips on each connector. It is essential that there be no air leaks at this connection, particularly because air leaks are the biggest cause of suction priming difficulties. Air being sucked in is almost impossible to detect. Ensure that both pipes are an even length, and will lie straight side by side before installing in the bore hole.

Lower injector assembly into bore hole and attach suction cover to pump with rubber gasket in place. Tighten the nuts sufficiently to prevent air leaks around the gasket, but do not overtighten. Attach Deep Well Injector model label (supplied with injector kit) to pump suction cover adjacent to inlet thread.

Delivery Piping

Polythene piping, imperial or metric, is recommended. Select the grade of pipe which has a pressure rating suitable for your application. Galvanised or PVC piping may also be used, provided the pressure rating is adequate.
For more detailed advice and information regarding pipe sizes for longer suction situations or greater suction lifts, please contact your Davey Dealer or the Davey Customer Service Centre.

Outlet Plumbing Connections

A gate valve must be fitted to the 1¼" pump outlet at the pressure regulating valve before the connection of outlet piping.

Pumps to be Operated as Automatic Pressure Systems

BASE MOUNTED TANKS USED.

1. Remove cap from ADR regulator valve and connect hose from it to Davey Supercell Pressure Tank. If using Davey Tank Hose firm hand tight should be sufficient. Ensure tank connection hose is not kinked.
2. Fit gate valve on the 1¼" outlet connection of the pressure regulating valve using thread seal tape.
3. Connect delivery piping at gate valve.
4. Fit pressure gauge/priming plug on top of Pump.

TOP MOUNT TANKS

1. Fit a Davey three way tee piece (P/No 48638) into the priming hole on top of the pump. Ensure adequate thread tape is used.
2. Screw the tank into the top of the three way tee using thread tape.
3. Perform steps (2) through to (3) above.
4. Fit the pressure gauge/priming plug to the horizontal outlet on the three way tee.

Pumps to be Operated Manually at Power Point

As for automatic operation except that no pressure tank fitted, and pressure switch tube to be removed from regulating valve, and valve connection plugged with plug supplied.

Power Connection - Single Phase

A power connection point should be provided by a qualified electrician within the pump housing.

Power connections and wiring must be carried out by an authorised electrician, in compliance with applicable local standards.

Single phase Models are rated for 220/250 volts, 50Hz operation, and may be connected to a standard 10 amp power outlet.
All single phase Models have automatic reset thermal overload protection built in, i.e. should overload on motor cause thermal to open circuit and switch motor off, it will automatically reset and switch motor on when motor has cooled down sufficiently, usually within a few minutes.

WARNING: Automatic reset thermal overloads will allow the pump to restart without warning.
ALWAYS disconnect the pump motor from the electrical supply before maintenance or repairs.

1. **Long extension leads should be avoided as they often have insufficient current carrying capacity to run electric motors, hence they can cause substantial voltage drop and operating problems.**
2. **Minimum voltage at the electric motor must not fall below 216 volts for single phase, otherwise motor damage may result which is not claimable under Guarantee.**
3. **If the electrical fittings in your country make it necessary to remove the plug from the lead fitted to the motor, care should be taken to ensure that the earth conductor green/yellow in the lead is properly connected to a good earth. This work must only be undertaken by an authorised electrician.**

Power Connection - Three Phase

Model 165D only is also available for connection to a 3 phase 50Hz, nominal 415 volt power supply. A recommended wiring diagram can be found inside the capacitor cover (see figure one below). Three phase units must be wired in by an authorised electrician in conjunction with a contactor which has quicktrip or M10 rated overloads set at nameplate current.

Davey recommend the use of overloads which also have the ability to detect "single phasing" or "dropped phase" conditions in the power supply.

NOTE: Minimum three phase voltage supply at the motor must not fall below 374 volts, otherwise motor damage may result which is not claimable under Guarantee.

Three phase 165D Pressure Pump models have been designed to allow for connection either side of the Capacitor Cover (marked "A" in figure one) on the motor. (NOTE: Three phase motors do not have capacitors fitted in the Capacitor Cover). This is achieved by way of either of the two 19mm access holes (marked "B" in figure one).

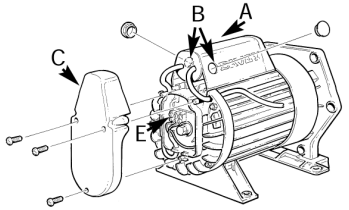

Figure One

The access holes are designed to accept most standard cable grommets. The unused hole can be sealed by inserting the plug enclosed with the pump. To connect a three phase Pressure Pump start by removing the Terminal Cover ("C").

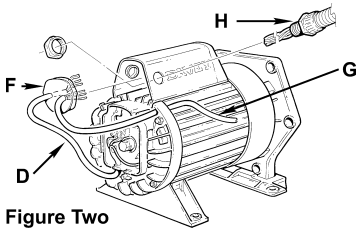

Figure Two

A short four core flex ("D") is fitted from the motor terminals ("E"). This lead is inserted through the Blanking Grommet ("F"). Pressure switch or other control leads ("G") can be fitted as well. Incoming power ("H") can be fitted through the preferred access hole, and terminated as shown in Figure Three. A termination kit is available if required.

Insert the Blanking Grommet ("F") into the Capacitor Cover ("A"). Fix the short lead ("D") into the path provided in the non-drive end-shield and replace the Terminal Cover ("C").

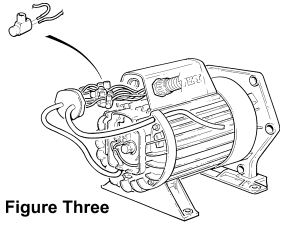
Figure Three

IMPORTANT NOTE: – THREE PHASE MODELS ONLY

Before finalising wiring connections, check that motor rotates in direction of arrow (clockwise when shaft is viewed from wiring connection end). To alter rotation, change any two power leads at motor terminals.

When the unit is connected and operating the phase balance should be checked. This should be within 5% variation. "Rolling" the leads may help to improve a small unbalance, but major phase unbalance will usually be attributable to an input power unbalance. This must be addressed before the pump is used.