DRY MATE™

Dry-Disconnects



# DM100SS, DM150SS & DM200SS SERIES
# 1" FULL PORT, 1½" FULL PORT &
# 2" STANDARD PORT STAINLESS STEEL

BANJO®

Liquid Handling Products

IDEX

## OVERVIEW AND FEATURES

The Banjo DM100SS, DM150SS & DM200SS Series of dry quick disconnect fittings are designed to handle many of the industrial chemicals in use today with a minimum of fluid spillage. The easy to use ball valve design of the fittings allows an unrestricted path for fluid flow.

The handles interlock making it easy to identify which handle opens or closes first.

The Dry-Mate is constructed of 316 stainless steel for strength and excellent chemical resistance. The PTFE seats and FKM face seal on the female give the Dry-Mate the same chemical resistance as Banjo's standard line of ball valves. The face seal on the female is available in FKM, EPDM and Kalrez®. The male has all PTFE sealing components.

The cam arm style of connection is one of the most recognized type of fluid connector in use. The Banjo Dry-Mate uses this style of connection for easy, quick, and positive engagement of the Dry-Mate components. The cam arms and mating profiles are 316SS for corrosion resistance. Both the cam arms and the mating profiles are easily replaceable if damaged.

The Female* has engagement ribs to provide correct alignment during assembly with the Male**.

The DM100SS, DM150SS & DM200SS Series have many safety features to reduce the risk of accidental spillage. Both handles have interlock buttons, which prevent the balls from opening when the halves are separated and the handles are in the fully closed position. The Female also has a 316SS yoke which keeps the clamp arms in the locked position when the couplers are connected and the handle is in the fully open position. This prevents the couplers from being separated when the handles are in the fully open position. The gasket that seals between the two components is mechanically secured to ensure that the gasket stays in place when the halves are disconnected.

Both the Male and Female come standard with a dust cover to keep the balls and seals protected when not in use.

## SPECIFICATIONS

Maximum Pressure 150 PSI @ 70° F  Minimum Temperature -20°F @ 70 PSI  Maximum Temperature 300° @ 70 PSI

| PART NO | DESCRIPTION | MAX PSI | PIPE SIZE | OPENING THRU BALL |
|---|---|---|---|---|
| DM100ASS | 1" Male x FPT NPT with PTFE Seals | 150 | 1" | 1" |
| DM100ABSS | 1" Male x FPT BSP with PTFE Seals | 150 | 1" | 1" |
| DM100DSS | 1" Female x FPT NPT with PTFE and FKM Seals | 150 | 1" | 1" |
| DM100DBSS | 1" Female x FPT BSP with PTFE and FKM Seals | 150 | 1" | 1" |
| DM100DSSE | 1" Female x FPT NPT with PTFE and EPDM Seals | 150 | 1" | 1" |
| DM100DBSSE | 1" Female x FPT BSP with PTFE and EPDM Seals | 150 | 1" | 1" |
| DM100DSST | 1" Female x FPT NPT with PTFE and Kalrez® Seals | 150 | 1" | 1" |
| DM100DBSST | 1" Female x FPT BSP with PTFE and Kalrez® Seals | 150 | 1" | 1" |

| PART NO | DESCRIPTION | MAX PSI | PIPE SIZE | OPENING THRU BALL |
|---|---|---|---|---|
| DM150ASS | 2" Male x FPT NPT with PTFE Seals | 150 | 1½" | 1½" |
| DM150ABSS | 2" Male x FPT BSP with PTFE Seals | 150 | 1½" | 1½" |
| DM150DSS | 2" Female x FPT NPT with PTFE and FKM Seals | 150 | 1½" | 1½" |
| DM150DBSS | 2" Female x FPT BSP with PTFE and FKM Seals | 150 | 1½" | 1½" |
| DM150DSSE | 2" Female x FPT NPT with PTFE and EPDM Seals | 150 | 1½" | 1½" |
| DM150DBSSE | 2" Female x FPT BSP with PTFE and EPDM Seals | 150 | 1½" | 1½" |
| DM150DSST | 2" Female x FPT NPT with PTFE and Kalrez® Seals | 150 | 1½" | 1½" |
| DM150DBSST | 2" Female x FPT BSP with PTFE and Kalrez® Seals | 150 | 1½" | 1½" |



**Dry Mate Dry Disconnects should be used, inspected, serviced and rebuilt only by persons who have been properly trained and instructed on their use, inspection, servicing and rebuilding.**

| PART NO | DESCRIPTION | MAX PSI | PIPE SIZE | OPENING THRU BALL |
|---|---|---|---|---|
| DM200ASS | 2" Male x FPT NPT with PTFE Seals | 150 | 2" | 1½" |
| DM200ABSS | 2" Male x FPT BSP with PTFE Seals | 150 | 2" | 1½" |
| DM200DSS | 2" Female x FPT NPT with PTFE and FKM Seals | 150 | 2" | 1½" |
| DM200DBSS | 2" Female x FPT BSP with PTFE and FKM Seals | 150 | 2" | 1½" |
| DM200DSSE | 2" Female x FPT NPT with PTFE and EPDM Seals | 150 | 2" | 1½" |
| DM200DBSSE | 2" Female x FPT BSP with PTFE and EPDM Seals | 150 | 2" | 1½" |
| DM200DSST | 2" Female x FPT NPT with PTFE and Kalrez® Seals | 150 | 2" | 1½" |
| DM200DBSST | 2" Female x FPT BSP with PTFE and Kalrez® Seals | 150 | 2" | 1½" |



### WARNING!

**The Banjo DM100SS, DM150SS & DM200SS Series should not be used at pressures above the Maximum Pressure or at temperatures above the Maximum Temperature or below the Minimum Temperature indicated. Use outside of these parameters could cause failure of the fittings, which may result in significant injury or death.**

**Although sold separately, the Male should only be used with the Female, and the Female should only be used with the Male.**

**The Banjo DM100SS, DM150SS & DM200SS Series should not be used with chemicals or other fluids with which it is not compatible. Before use, confirm compatibility of the chemical or other fluid being transferred with the materials used in the Banjo DM100SS, DM150SS & DM200SS Series.**

## INSTALLATION

When installing the couplers, use a good quality thread sealant compatible with the liquid being used in the system. Screw the coupler onto the thread hand tight; using a wrench, tighten the coupler onto the thread another 1/4 to 1/2 turn. When tightening the threads, use the wrench on the hex flat portion only. Do not apply pressure to the body of the Dry-Mate.



### WARNING!

**The Male should always be installed on the high-pressure side of the system. Failure to install the Male on the high-pressure side can trap pressurized fluid between the balls, causing fluid to spray when the two halves are disconnected, which may result in significant injury or death!**

**Never open Male or Female couplings when disconnected. High-pressure fluid can be retained inside valve causing injury if opened while not connected to a mating coupler. Inspect all safety interlocks daily. If any of the safety features are not functioning or are damaged, unit must be repaired before using in service. Inspect clamps and mating ribs for damage and wear. Bent or damaged parts as well as excessive wear can adversely affect product performance. Inspect seals and sealing area on faces of couplers for any signs of damage. All surfaces should be clean and damage free prior to connection.**

## OPERATION

Step 1

To attach the two fittings together, make sure the faces of the two fittings are free from dirt or other foreign material. Make sure the seal is properly installed and without damage. Align the two fittings together as shown in Figure 1.

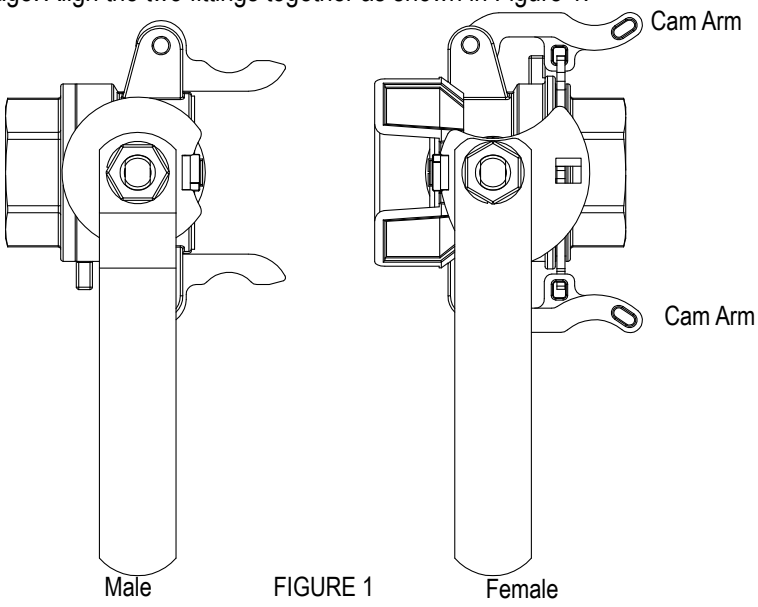


FIGURE 1

Step 2

Slide the Female onto the Male. The alignment tabs on the Female will guide the cam profile inserts into the cam arms of the Female. After the assembly is together, rotate the cam arms toward the body of the Female. Make sure the cam arms are pushed all the way to the female body.This will couple the halves together, depressing the anti-rotation buttons under the handles, which will allow the handles to rotate. After the clamp arms are rotated in position, the assembly should look like Figure 2.

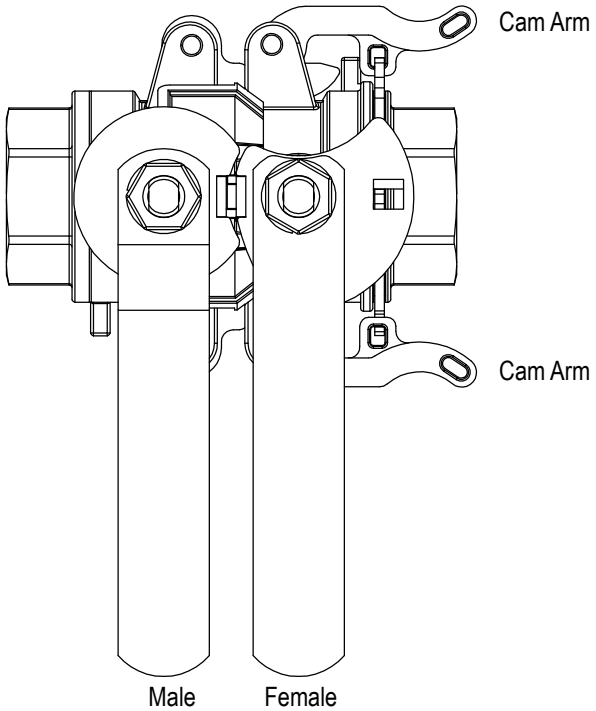


FIGURE 2



## WARNING!

**Make sure the cam arms are in the fully locked position as shown in Figure 2 before attempting to rotate the handle of either the Male or Female.**

Step 3

In this position, the handle of the Female must be rotated before the handle of the Male can rotate. Rotate the handle of the Female to the fully open position. When the female handle is fully opened, the locking yoke will engage the clamp arms and prevent the clamp arms from being opened while the handle is in the fully open position. The handles should now be oriented as shown in Figure 3.

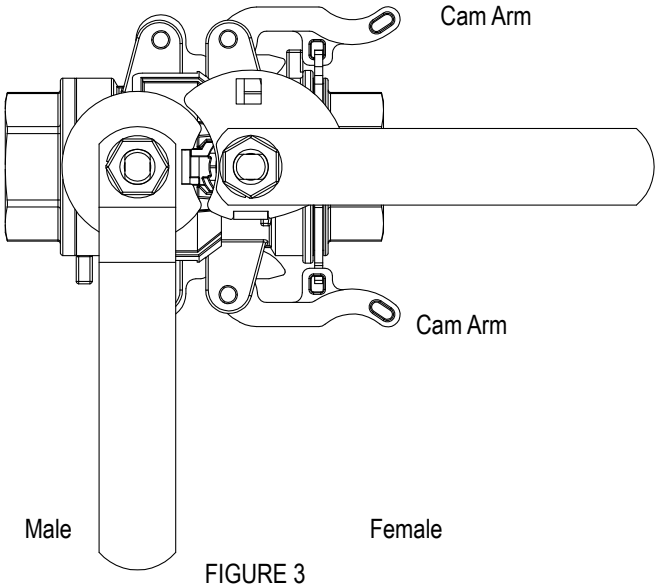


FIGURE 3

Step 4

After the handle of the Female has been fully opened, the handle of the Male can be rotated. Rotate the handle of the Male to the fully open position. The assembly is now opened and flow may begin. When both valves are fully opened the handles should be oriented as shown in Figure 4.

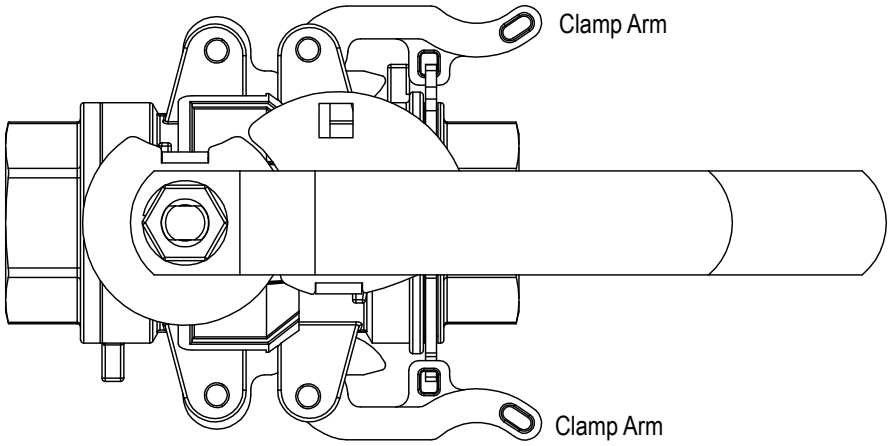


FIGURE 4

To close the valves and disconnect the couplers, reverse steps 1 through 4.



## WARNING!

**As the handle of the Female is being closed and before the handle is fully closed, the locking yoke that prevents the cam arms from being opened will disengage.**

**Make sure that the handle on the Female is fully closed before opening the clamp arms.**

**If the clamp arms are opened before the handle of the Female is fully closed, liquid may spray or be discharged, which may result in significant injury or death.**

## DISASSEMBLY INSTRUCTIONS

***Stainless Steel Dry Mate Rebuild Instructions***
(Applies to Male (A) half only!)

1. Remove the end plate by holding the body with a bench vise and turning the end plate by the wrench flats. The end plate has right hand threads.
2. Remove the ball. The handle should be in the closed position when removing the ball. The ball should slide out easily.
3. Remove the old seat that goes between the body and the ball.
4. Install the new seat.
5. Reinstall the ball. Check for pits, scrapes, or any other damage. If damaged or worn, replace ball.
6. Replace old seat in end plate with new seat.
7. Replace old body gasket with a new gasket.
8. Reinstall end plate on valve. Before tightening the end plate, make sure that the handle and ball are in the closed position. Tighten end plate to 325 Ft-lb of torque for 1 ½" and 2" Dry Mate. Tighten end plate to 150 Ft-lb of torque for the 1" Dry Mate.
9. Check to make sure the dry mate half is functional and all the safety features are working properly.

***Stainless Steel Dry Mate Face Seal Replacement Instructions***
(Applies to Female (D) half only!)

1. Remove the end plate by holding the body with a bench vise and turning the end plate by the wrench flats. The end plate has right hand threads. Pay attention to the orientation of the locking yoke as you remove the end plate.
2. Remove the ball. The handle should be in the closed position when removing the ball. The ball should slide out easily.
3. Remove the seat that goes between the Face Seal and the ball.
4. Remove the old Face Seal from the Dry Mate body, paying attention to how it sets in the valve body.
5. Install the new Face Seal.
6. Install the seat. Inspect the old seat for damage or wear. If damaged or worn, replace with new seat.
7. Reinstall the ball. Check for pits, scrapes, or any other damage. If damaged or worn, replace ball.
8. Check seat in end plate for wear or damage. If worn or damaged, replace with new seat.
9. Check Body Gasket for wear or damage. If worn or damaged, replace with a new gasket.
10. Make sure locking yoke is still on the end plate. Reinstall end plate on valve, checking to see that the orientation of the locking yoke matches the original orientation. Before tightening the end plate, make sure that the handle and ball are in the closed position. Tighten end plate to 325 Ft-lb of torque for 1 ½" and 2" Dry Mate. Tighten end plate to 150 Ft-lb of torque for the 1" Dry Mate.
11. Check to make sure the dry mate half is functional and all the safety features are working properly.



## WARNING!

**Make sure the Dry Mate is flushed clean of chemicals and other fluids before any rebuild or seal replacement.**

BANJO Liquid Handling Products

**BANJO CORPORATION**
A Unit of IDEX Corporation
150 Banjo Drive
Crawfordsville, IN 47933 U.S.A.
Telephone: (765) 362-7367
Fax: (765) 362-0744
**banjocorp.com**

© Copyright 2018 Banjo Corporation. All Rights Reserved. | DryMatesManual_Rev0918KK-81

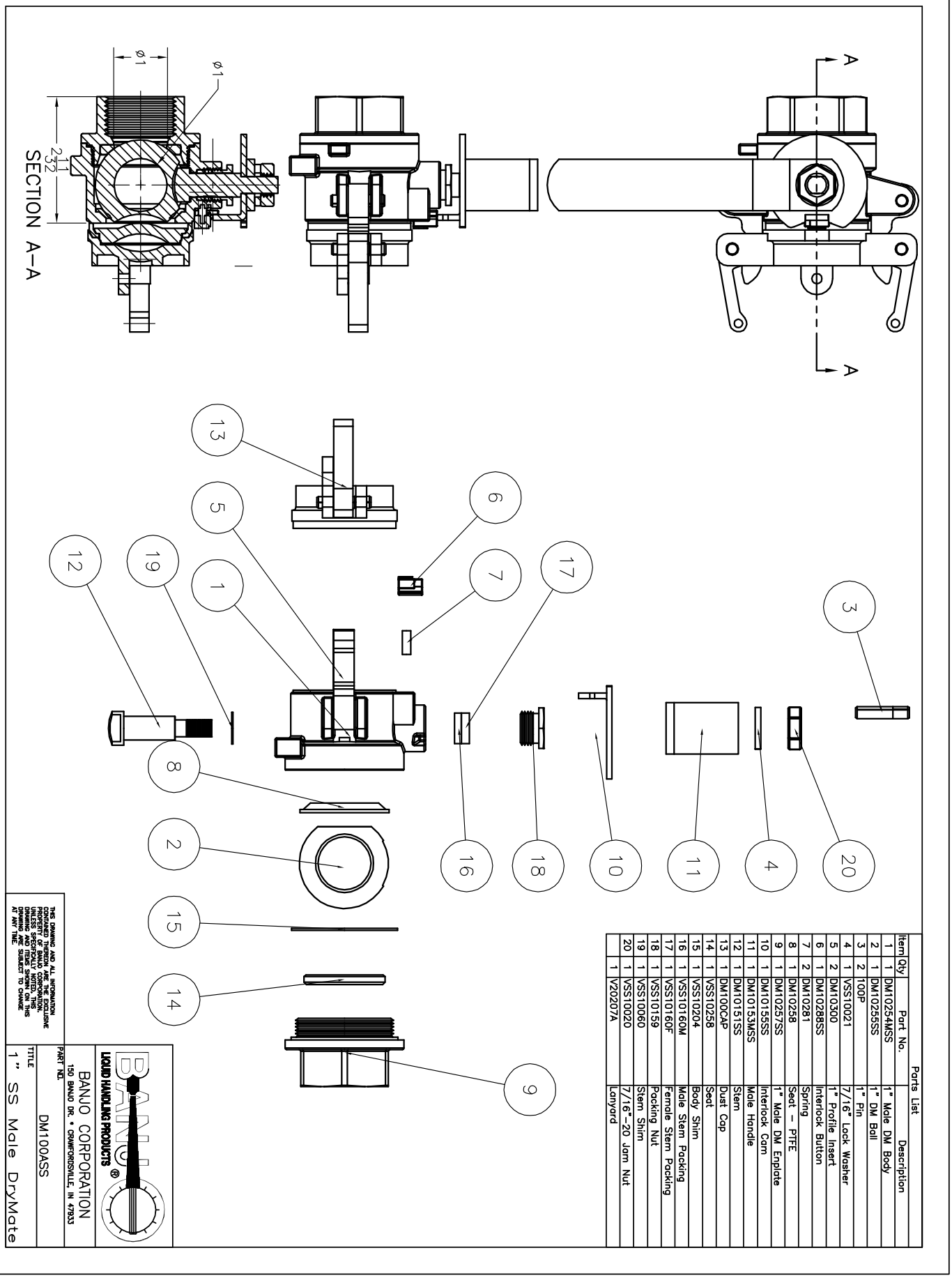


| Item | Qty | Part No. | Description |
|---|---|---|---|
| 1 | 1 | DM10254MSS | 1" Male DM Body |
| 2 | 1 | DM10255SS | 1" DM Ball |
| 3 | 2 | 100P | 1" Pin |
| 4 | 1 | VSS10021 | 7/16" Lock Washer |
| 5 | 2 | DM10300 | 1" Profile Insert |
| 6 | 1 | DM10288SS | Interlock Button |
| 7 | 2 | DM10281 | Spring |
| 8 | 1 | DM10258 | Seat – PTFE |
| 9 | 1 | DM10257SS | 1" Male DM Enplate |
| 10 | 1 | DM10155SS | Interlock Cam |
| 11 | 1 | DM10153MSS | Male Handle |
| 12 | 1 | DM10151SS | Stem |
| 13 | 1 | DM100CAP | Dust Cap |
| 14 | 1 | VSS10258 | Seat |
| 15 | 1 | VSS10204 | Body Shim |
| 16 | 1 | VSS10160M | Male Stem Packing |
| 17 | 1 | VSS10160F | Female Stem Packing |
| 18 | 1 | VSS10159 | Packing Nut |
| 19 | 1 | VSS10060 | Stem Shim |
| 20 | 1 | VSS10020 | 7/16"-20 Jam Nut |
| | 1 | V20207A | Lanyard |

THIS DRAWING AND ALL INFORMATION CONTAINED THEREON ARE THE EXCLUSIVE PROPERTY OF BANJO CORPORATION UNLESS SPECIFICALLY OTHERWISE NOTED. DRAWING AND ITEMS SHOWN ON THIS DRAWING ARE SUBJECT TO CHANGE AT ANY TIME

BANJO®
LIQUID HANDLING PRODUCTS

BANJO CORPORATION
150 BANJO DR. • CRAWFORDSVILLE, IN 47933

PART NO.
DM100ASS

TITLE
1" SS Male DryMate

**NOTE: Please see banjocorp.com for more product drawings.**

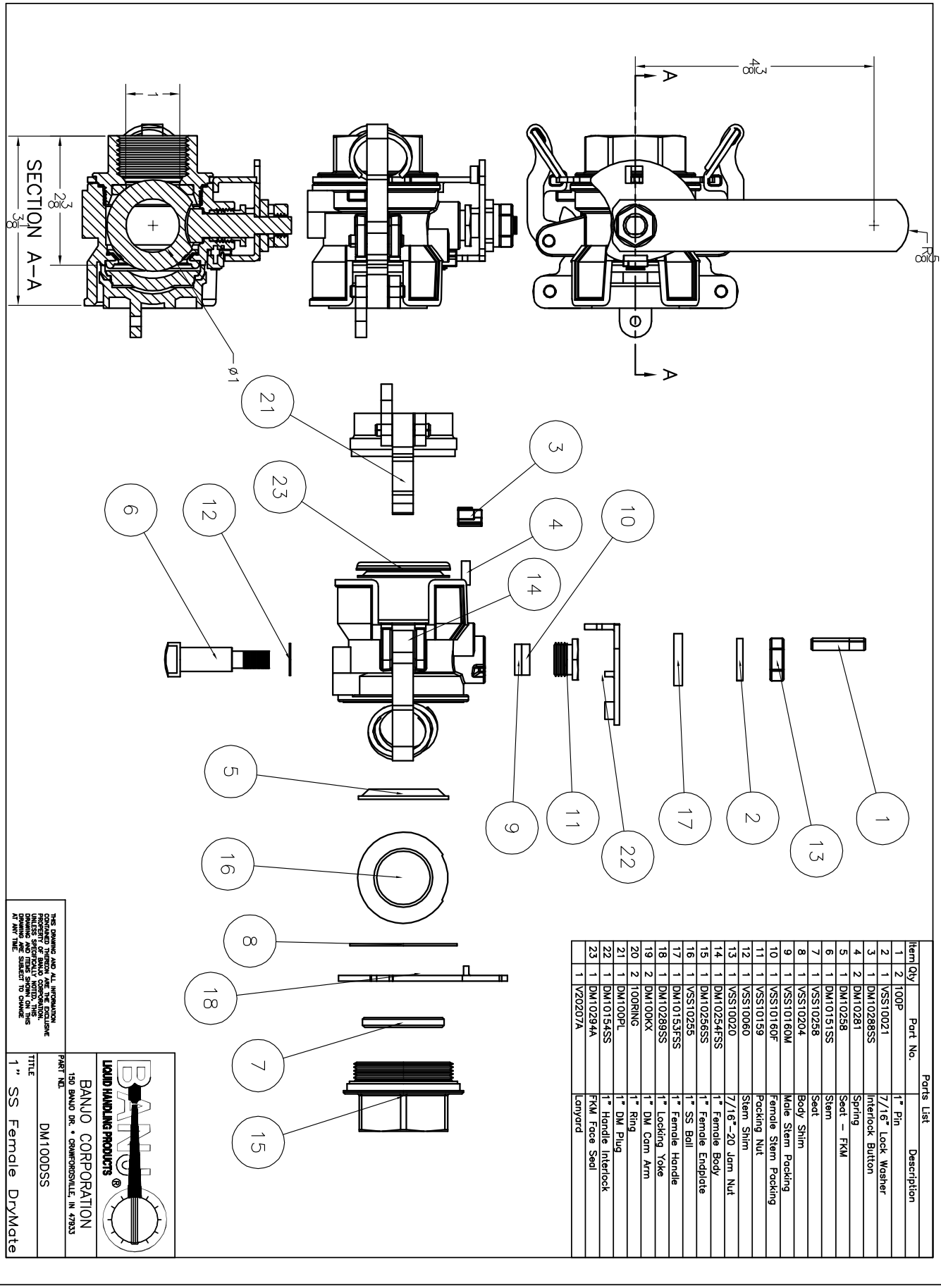


| Item | Qty | Part No. | Description |
|---|---|---|---|
| 1 | 2 | 100P | 1" Pin |
| 2 | 1 | VSS10021 | 7/16" Lock Washer |
| 3 | 1 | DM10288SS | Interlock Button |
| 4 | 2 | DM10281 | Spring |
| 5 | 1 | DM10258 | Seat – FKM |
| 6 | 1 | DM10151SS | Stem |
| 7 | 1 | VSS10258 | Seat |
| 8 | 1 | VSS10204 | Body Shim |
| 9 | 1 | VSS10160M | Male Stem Packing |
| 10 | 1 | VSS10160F | Female Stem Packing |
| 11 | 1 | VSS10159 | Packing Nut |
| 12 | 1 | VSS10060 | Stem Shim |
| 13 | 1 | VSS10020 | 7/16"-20 Jam Nut |
| 14 | 1 | DM10254FSS | 1" Female Body |
| 15 | 1 | DM10256SS | 1" Female Endplate |
| 16 | 1 | VSS10255 | 1" SS Ball |
| 17 | 1 | DM10153FSS | 1" Female Handle |
| 18 | 1 | DM10289SS | 1" Locking Yoke |
| 19 | 2 | DM100KX | 1" DM Cam Arm |
| 20 | 2 | 100RING | 1" Ring |
| 21 | 1 | DM100PL | 1" DM Plug |
| 22 | 1 | DM10154SS | 1" Handle Interlock |
| 23 | 1 | DM10294A | FKM Face Seal |
| | 1 | V20207A | Lanyard |

Parts List

THIS DRAWING AND ALL INFORMATION CONTAINED THEREON ARE THE EXCLUSIVE PROPERTY OF BANJO CORPORATION. UNAUTHORIZED REPRODUCTION OF THIS DRAWING AND ITEMS SHOWN ON THIS DRAWING ARE SUBJECT TO CHANGE AT ANY TIME.

BANJO®
LIQUID HANDLING PRODUCTS

BANJO CORPORATION
150 BANJO DR. • CRAWFORDSVILLE, IN 47933

PART NO. DM100DSS

TITLE 1" SS Female DryMate

**NOTE: Please see banjocorp.com for more product drawings.**