GENERAL PUMP *A member of the Interpump Group*

THE GIRAFFE LINE

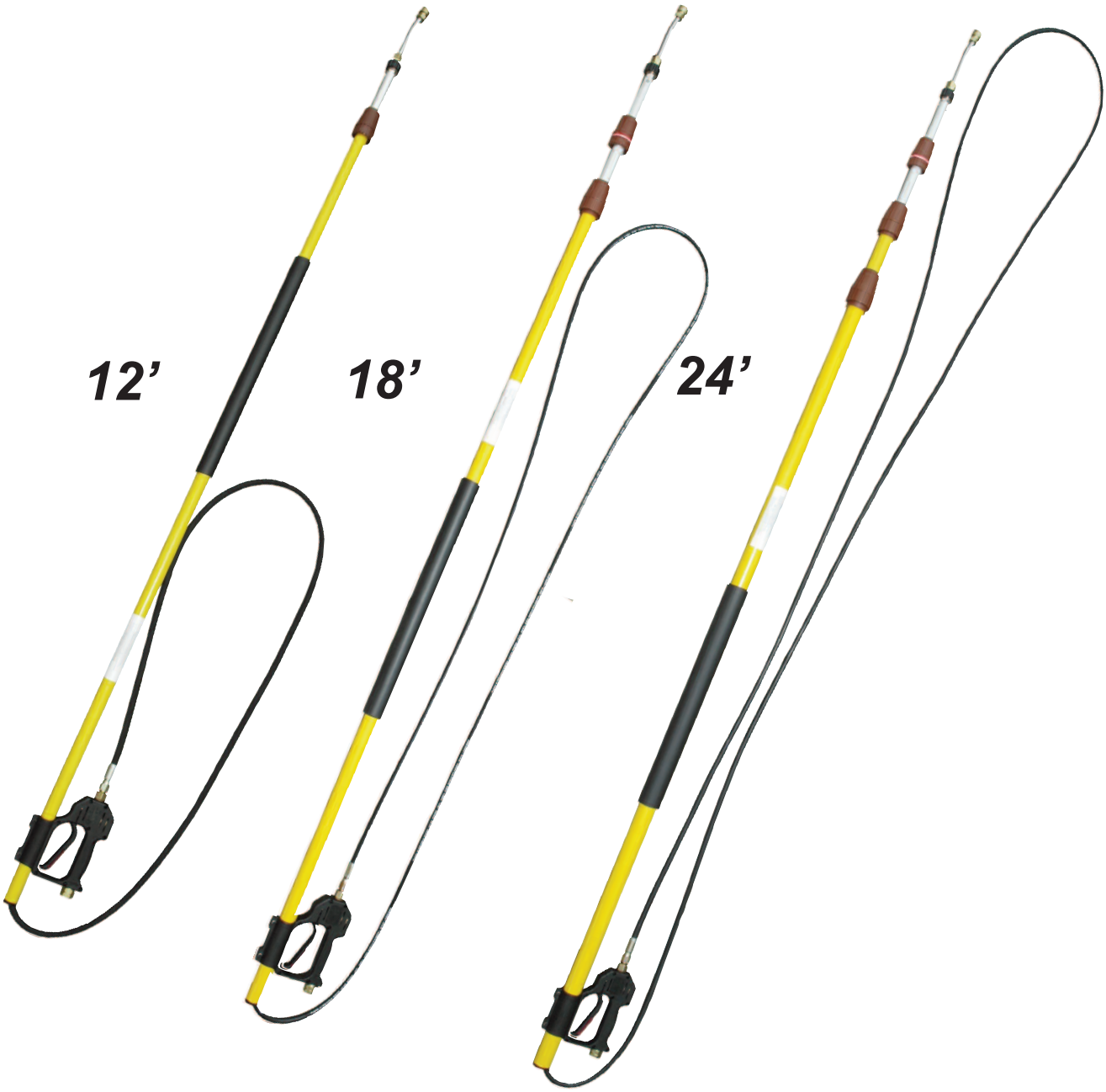

High-Pressure Extendable Wands

ACCESSORIES

Thank you for purchasing a Giraffe extension wand from **General Pump**.

With proper care your new Giraffe extension wand will give you years of reliable service.

Your safety is important to us.

Please read and make sure you understand all of the safety warnings

and precautions prior to using your Giraffe extension wand.

If you have any questions regarding the safe operation of your Giraffe extension wand

please contact our Technical Support Team at 1-888-474-5487

GENERAL PUMP

GENERAL PUMP *A member of the Interpump Group*

SPECIFICATIONS*

Wand Model	DLTG12	DLTG18	DLTG24
Maximum Volume	10.5 GPM		
Maximum Gun Pressure	4000 PSI		
Maximum Fluid Temperature	195ºF		
Shipping Weight	9.2 lb	11.6 lb	14.2 lb
Dimensions - Retracted	6.1" x 7' 1/2"	6.1" x 7'5"	6.1" x 7'8"

PERFORMANCE**

The Giraffe extension wands operate with minimal pressure loss. This means that they may be used with downstream chemical injectors.

The chart at the right depicts the effects of discharge hose length on a fixed chemical injector in 3 gpm and 5 gpm systems. Tests were conducted using water. These test results are representative of performance and are not accurate for all applications. Outside factors such as discharge hose length, water temperature, viscosity of the chemical, and discharge flow effect how well any injector can draw chemical.

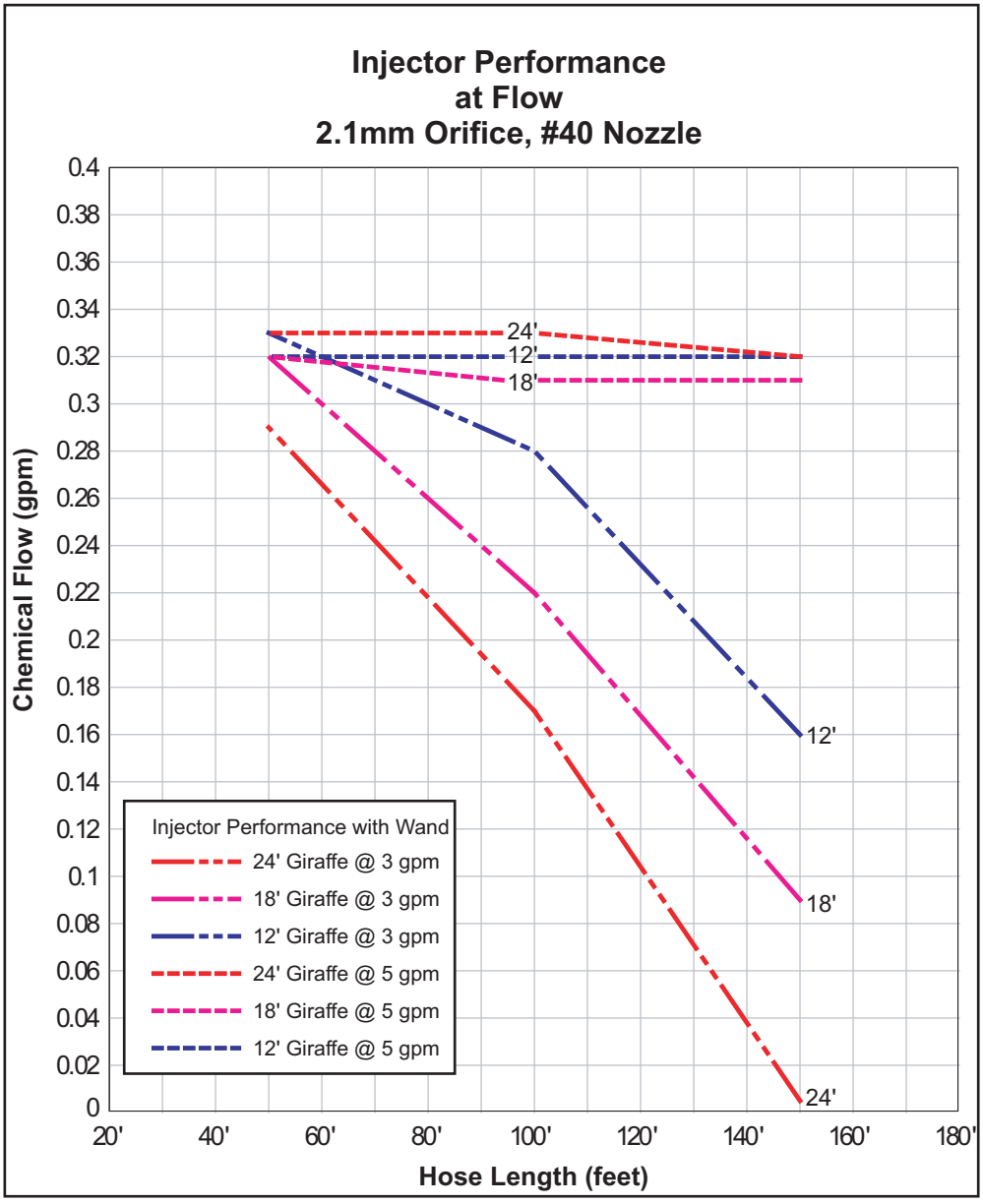

* Specifications subject to change without notice
* *Values are representative of performance. Actual performance will vary depending on components and conditions.

GENERAL PUMP

SAFETY WARNINGS AND PRECAUTIONS



THE USER OF THIS ACCESSORY IS RESPONSIBLE FOR READING, UNDERSTANDING, AND FOLLOWING ALL WARNINGS AND PRECAUTIONS PRIOR TO OPERATION.

FAILURE TO FOLLOW ALL WARNINGS AND PRECAUTIONS MAY RESULT IN PROPERTY DAMAGE, SERIOUS PERSONAL INJURY, OR DEATH.

- **NEVER** use near power lines.
- **NEVER** extend or retract wand while spraying or while under pressure. Stop the equipment and relieve pressure before making any adjustments to the wand.
- **NEVER** change nozzles or accessories while under pressure. Stop the equipment and relieve pressure before making any changes.
- **NEVER** use while on ladders or scaffolding.
- **NEVER** use with unapproved accessories.
- **NEVER** exceed rated pressure or volume.
- **NEVER** use high-pressure to clean persons or animals.
- **NEVER** remove or alter warning labels or identification tags.
- **NEVER** use wand if damaged.
- **ALWAYS** read, understand, and follow operation instructions.
- **ALWAYS** make certain area is clear of obstructions or hazards.
- **ALWAYS** maintain proper balance and control of extension wand.

This label appears on the extension wand. **Do not remove or deface.**

If the label becomes damaged or unreadable please call for a no charge replacement.

DANGER

ELECTRIC SHOCK HAZARD

Do not use on or near electrical wiring of any kind.
Keep at least 10 feet (3 meters) away from power lines.
Do not touch or aim spray at electrical wiring of any kind.
Do not operate from ladders or elevating devices of any kind.
Operator must maintain both feet on solid ground.

GPC0058

GENERAL PUMP

ASSEMBLY

To protect the coupler and lance during shipping these parts are shipped strapped to the extension pole.

All Giraffe wands require some final assembly.

To complete the assembly, simply attach the M22 fitting as illustrated.

The extension wand is now ready for use.



OPERATION INSTRUCTIONS

Read, understand, and follow ALL safety guidelines and operation instructions prior to use.

To use your Giraffe extension wand:
Connect the outlet of your pressure washer to the inlet port of the trigger gun of the Giraffe extension wand using appropriate quick couplers or fittings rated to handle high pressure.

Do **NOT** bypass, disable, or remove the trigger gun.

DO NOT use pliers, pipe wrenches, etc. to tighten as it will cause the collet to seize to the threaded plastic housing. **HAND TIGHTEN ONLY!**

The Giraffe extension wand may be used fully retracted or fully extended or any point in between. Caution must be used when the wand is extended as the reaction force of the nozzle spraying will cause the wand to flex. Make absolutely certain that there are no power lines or sources of electrical power within 10 feet of the lance at any time.

Contact with power transmission lines can cause fatal electrocution!

Caution: Do not extend or retract your Giraffe extension wand while spraying or while under pressure. Stop the equipment and relieve any pressure before making adjustments to the extension wand or changing nozzles.

To extend the wand:
Loosen the brown lock rings and pull the wand out to the desired length. Re-tighten the lock rings to hold the wand at the desired length.

To retract the wand:
Loosen the brown lock rings and slide the extension segment into the wand until the desired length is reached and re-tighten the lock rings to hold the extension segments in place.

-continued next page-

OPERATION INSTRUCTIONS (continued)

To begin spraying:
Start the pressure washer.
Raise the wand and keep the nozzle at least ten feet away from the surface to be cleaned. **Keep the extension wand clear of power lines.**
Squeeze the trigger to begin spraying, maintain stable footing, and move the wand in to the surface to be cleaned.

Caution: Except in cases of emergency, do not release the trigger near any surfaces.

To stop spraying:
Before releasing the trigger gun move the nozzle at least ten feet away from the surface being cleaned and make sure you have solid footing. **The wand will rebound when the trigger is released or if pressure is lost. USE EXTREME CAUTION** when working on or near fragile surfaces as there may be enough force to damage surfaces or break windows. **Keep clear of power lines.** When you are clear of the work surface and in a safe area - release the trigger.

BELT ASSEMBLY/DIRECTIONS
The belt is like any normal belt - it fits around a person's waist with (if you are right handed) the aluminum pole clamp to your right hip side. There is a nylon strap attached to the belt that you can adjust, so the belt is clipped snuggly into place around your waist. There are two plastic openings on the one end of the belt with the smaller opening used to insert the clip on the nylon belt strap, which is wrapped in place around your waist. The larger second opening is for the adjustable shoulder harness which you cross over your opposite shoulder (left shoulder) from back to front so the clip is inserted at the same location that you just secured the nylon strap onto the belt.

To attach the belt to the telescoping wand, first unclip the nylon strap holding the aluminum clamp from the belt. Securely fasten the aluminum clamp to the telescoping pole in a position that the operator chooses. Tighten with a screwdriver so that the clip is positioned so it can be fastened back into the belt. Clip the nylon strap, which is now clamped onto the telescoping wand, back into the belt and you are ready to operate the telescoping wand with the belt securely assembled.





GENERAL PUMP

PARTS LIST & EXPLODED VIEW

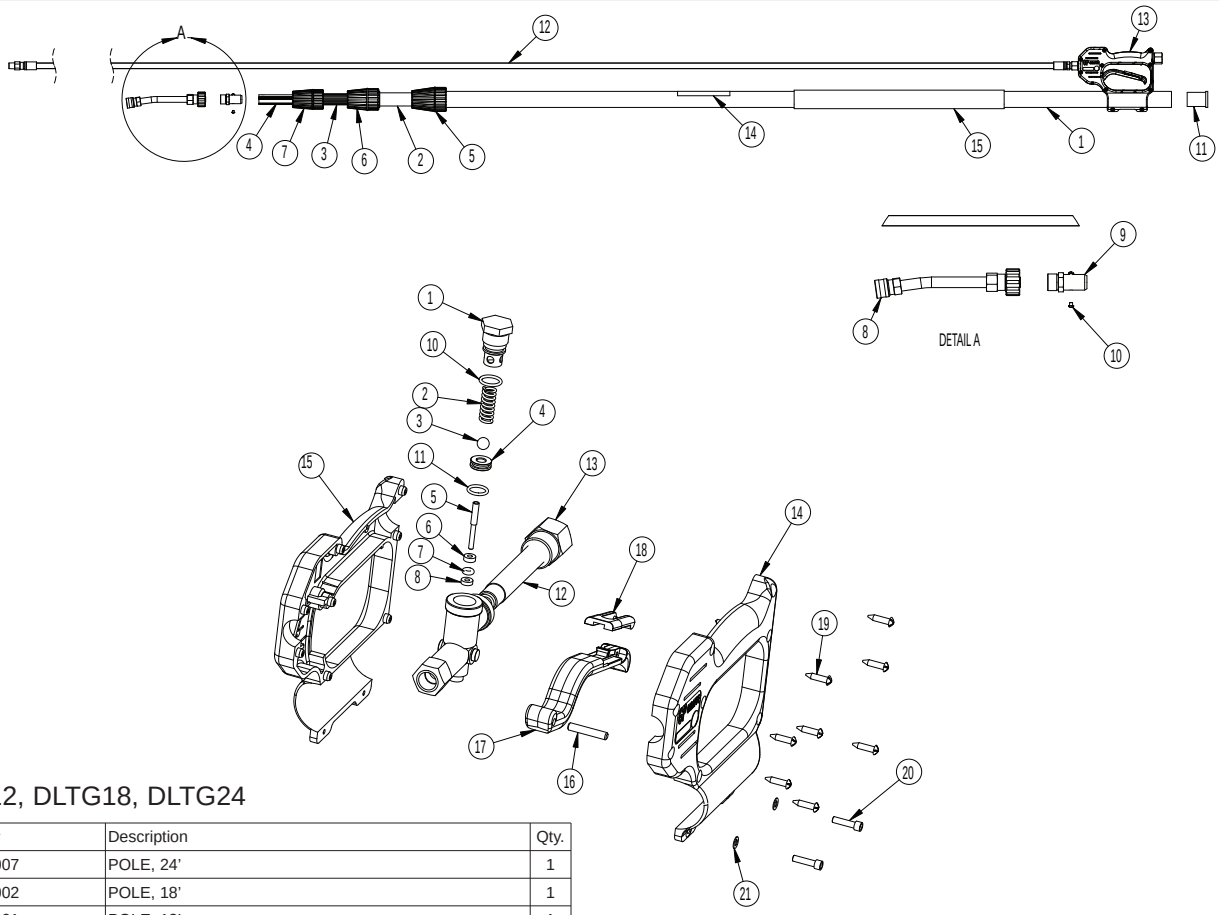

DLTG12, DLTG18, DLTG24

Item	Part #	Description	Qty.
1	2640007	POLE, 24’	1
	2640002	POLE, 18’	1
	2640001	POLE, 12’	1
2	2103036	ASSY., POLE, 24’	1
3	2103037	ASSY., POLE, 24’	1
	2103034	ASSY., POLE, 18’	1
4	2103038	ASSY., POLE, 24’	1
	2103035	ASSY., POLE, 18’	1
	2103033	ASSY., POLE, 12’	1
5	2660017	ASSY., COLLET, 24’	1
	2660016	ASSY., COLLET, 18’ AND 24’	1
	2660009	ASSY., COLLET, 12’	1
6	2660016	ASSY., COLLET, 18’ AND 24’	1
7	2660086	ASSY., COLLET, 24’ AND 18’	1
8	2100205	ASSY., LANCE	1
9	2510116	ADAPTER, M22	1
10	2200004	SCREW, M4	2
11	2660018	GROMMET, 24’	1
	2660015	GROMMET, 18’	1
	2660008	GROMMET, 12’	1
12	680131	ASSY., HOSE, 24’	1
	680129	ASSY., HOSE, 18’	1
	680130	ASSY., HOSE, 12’	1
13	DG4000TS24	ASSY., GUN, 24’	1
	DG4000TS18	ASSY., GUN, 18’	1
	DG4000TS12	ASSY., GUN, 12’	1
14	GPC0058	LABEL, WARNING	1
15	2702015	GUARD, FOAM, 24’	1
	2702014	GUARD, FOAM, 18’	1
	2702013	GUARD, FOAM, 12’	1
		REPLACEMENT KITS INCLUDE ITEM #s 1, 2, 3, 4, 5, 6, 7, 11, 14, 15	
	2100243	COMPLETE POLE REPLACEMENT KIT, 12’	
	2100244	COMPLETE POLE REPLACEMENT KIT, 18’	
	2100245	COMPLETE POLE REPLACEMENT KIT, 24’	

DG4000TS12, DG4000TS18, DG4000TS24

Item	Part #	Description	Qty.
1	2510005	PLUG, GUN	1
2	2720001	SPRING	1
3	2520004	BALL	1
4	2520003	SEAT, GUN	1
5	2520002	PIN, GUN	1
6	2510004	WASHER, BRASS	1
7	2700002	O-RING, BUNA	1
8	2660007	WASHER, TEFLON	1
9	2452001	FORGING, GUN	1
10	2700004	O-RING, BUNA	1
11	2700003	O-RING, BUNA	1
12	2520001	TUBE, INLET, GUN	1
13	2510003	FITTING, INLET, GUN	1
14	2660192	GUN, HOUSING, LEFT, 24’	1
	2660191	GUN, HOUSING, LEFT, 18’	1
	2660190	GUN, HOUSING, 12’	1
15	2660013	GUN, HOUSING, RIGHT, 24’	1
	2660011	GUN, HOUSING, RIGHT, 18’	1
	2660002	GUN, HOUSING, RIGHT, 12’	1
16	2512002	PIN, TRIGGER, GUN	1
17	2660004	TRIGGER, GUN	1
18	2660005	STOP, TRIGGER, GUN	1
19	2200002	SCREW	8
20	2200001	SCHS, M4 X 12	2
21	2203407	WASHER	2
	2100001	GUN REPAIR KIT	

GENERAL PUMP

ACCESSORIES

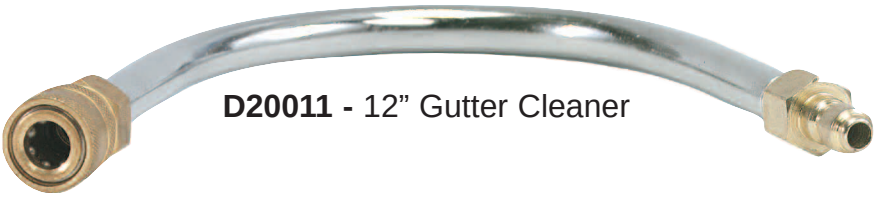

D20011 - 12” Gutter Cleaner



5 Pack Nozzle Kits
Kit includes one each:
0º - 15º - 25º - 40º High Pressure Nozzles
and one 25º #40 Soap Nozzle

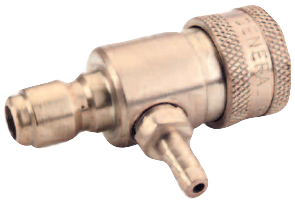

QC Fixed Chemical Injectors
Flows to 8.0 GPM
Pressures to 3500 PSI
1.8mm, 2.0mm, 2.2mm Orifices



Y3K Rotating Nozzles
Nozzle Sizes #2.0 to #6.5
Pressures to 3000 PSI



Hose Reels
- 3500 psi
- 50’, 100’, 150’, and 200’ Capacities



D20015 - Wand Support Belt
- Reduces strain on back, shoulders, and arms of the operator

Ref 300518 Rev J
10-10

GENERAL PUMP **1174 Northland Drive** **Mendota Heights, MN 55120**
Phone: 651-686-2199 **FAX: 800-535-1745** **e-mail: sales@gpcompanies.com** **www.generalpump.com**