ACCESSORIES

ACCESSORIES

GENERAL PUMP *A member of the Interpump Group*

DLD42VS

Vented Double Lance

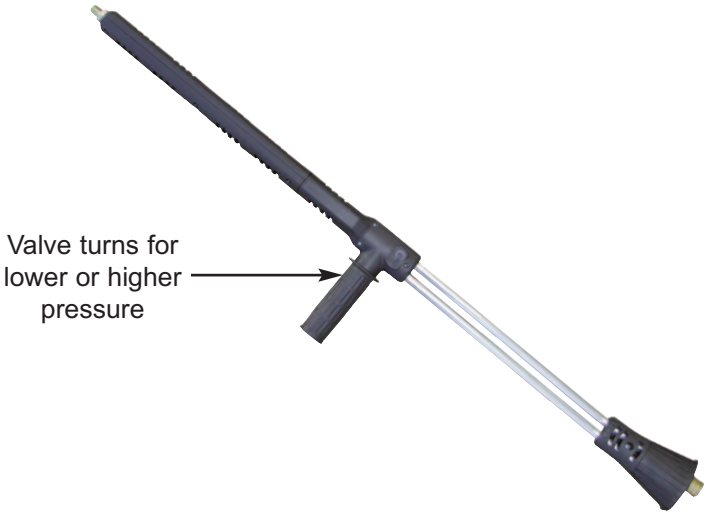

SPECIFICATIONS

Part Number		DLD42VS
Maximum Volume		10.5 GPM
Maximum Discharge Pressure		4000 PSI
Maximum Temperature		320° F
Port Sizes	Inlet	1/4” NPT-M
	Outlet	1/4” NPT-M
Dimensions		42” x 6.4” x 1.3” OD
Weight		5.4 lbs.
		42 in.
Materials		Zinc Plated Steel

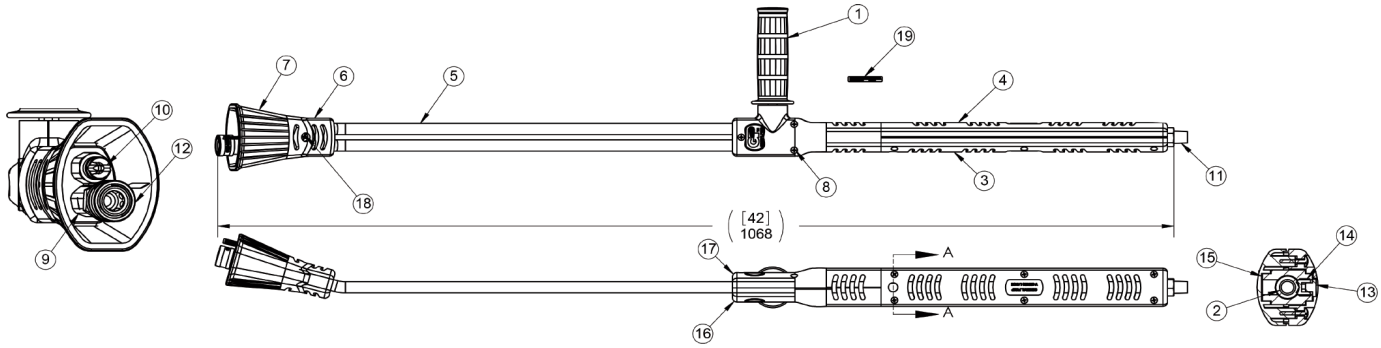

Parts List

No.	Part No.	Description	Kit	Qty.
1.	2103067	Valve, Lance, Dual		1
2.	2550104	Tube, Inlet		1
3.	2660137	Cover, Lance		1
4.	2660138	Cover, Lance		1
5.	2550074	Tube, Outlet		2
6.	2660129	Cover, Lance		1
7.	2660139	Cover, Nozzle		1
8.	2200065	Screw		9
9.	2510140	Fitting, 1/4 x 1/4		1
10.	2510142	Nozzle, Soap		1
11.	2530046	Fitting		1
12.	D10002	Coupler, 1/4 QC		1
13.	2660021	Plug, Hex		1
14.	2200064	Screw, Set		1
15.	2510102	Fastener, Lance Cover		1
16.	2660176	Cover, Lance		1
17.	2660177	Cover, Lance		1
18.	2660067	Screw		1
19.	2400166	Label, Prop 65		1

* 2100507 REPAIR KIT *

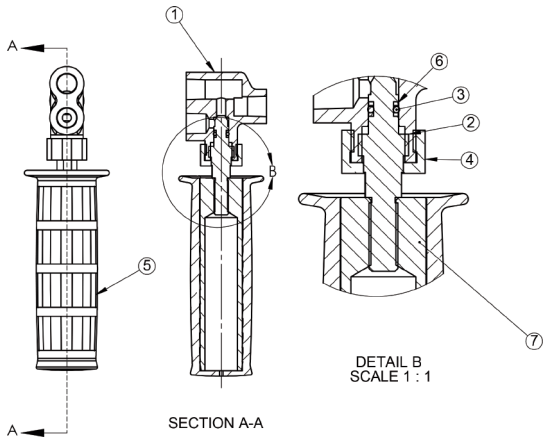

2103067 PARTS LIST

No.	Part No.	Description	Kit	Qty.
1.	2452016	Body, Valve		1
2.	2520100	Stem		1
3.	2701032	O-ring	*	1
4.	2510188	Nut		1
5.	2702048	Handle		1
6.	2710022	Back-up Ring	*	2
7.	2500005	Insert, Handle		1

Ref 310066 Rev. A
08-17

GENERAL PUMP 1174 Northland Drive • Mendota Heights, MN 55120
Phone: 651.686.2199 • Fax: 800.535.1745 • e-mail: sales@gpcompanies.com • www.generalpump.com

GENERAL PUMP