AR 8.3 DFL

BASSA PRESSIONE
low pressure

SERIE 12V DIAPHRAGM PUMPS
pompe a membrana 12V

Dimensions:

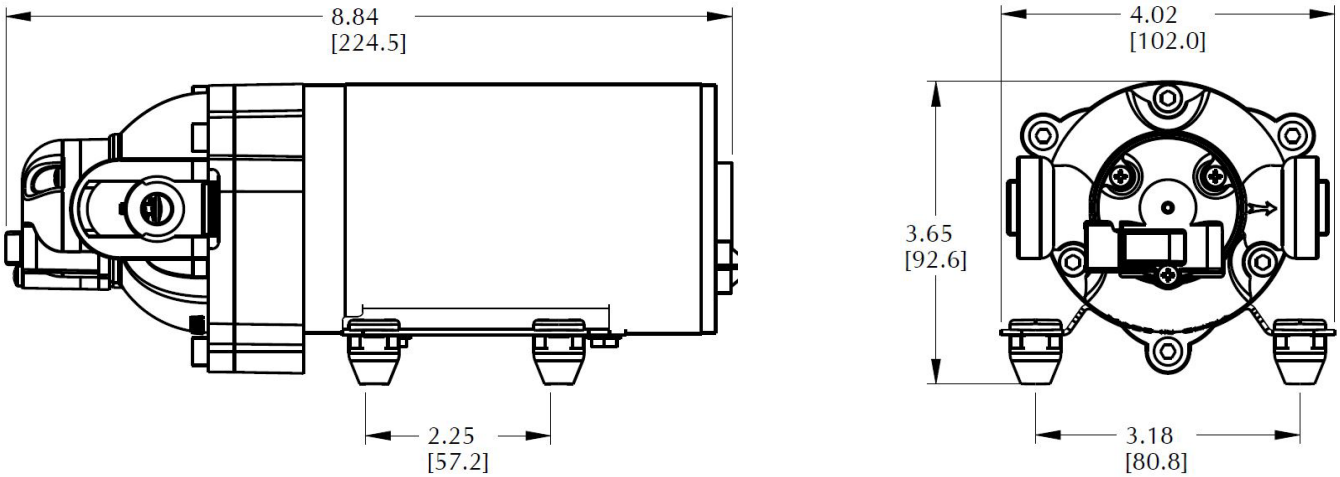

Performance at 12V DC:

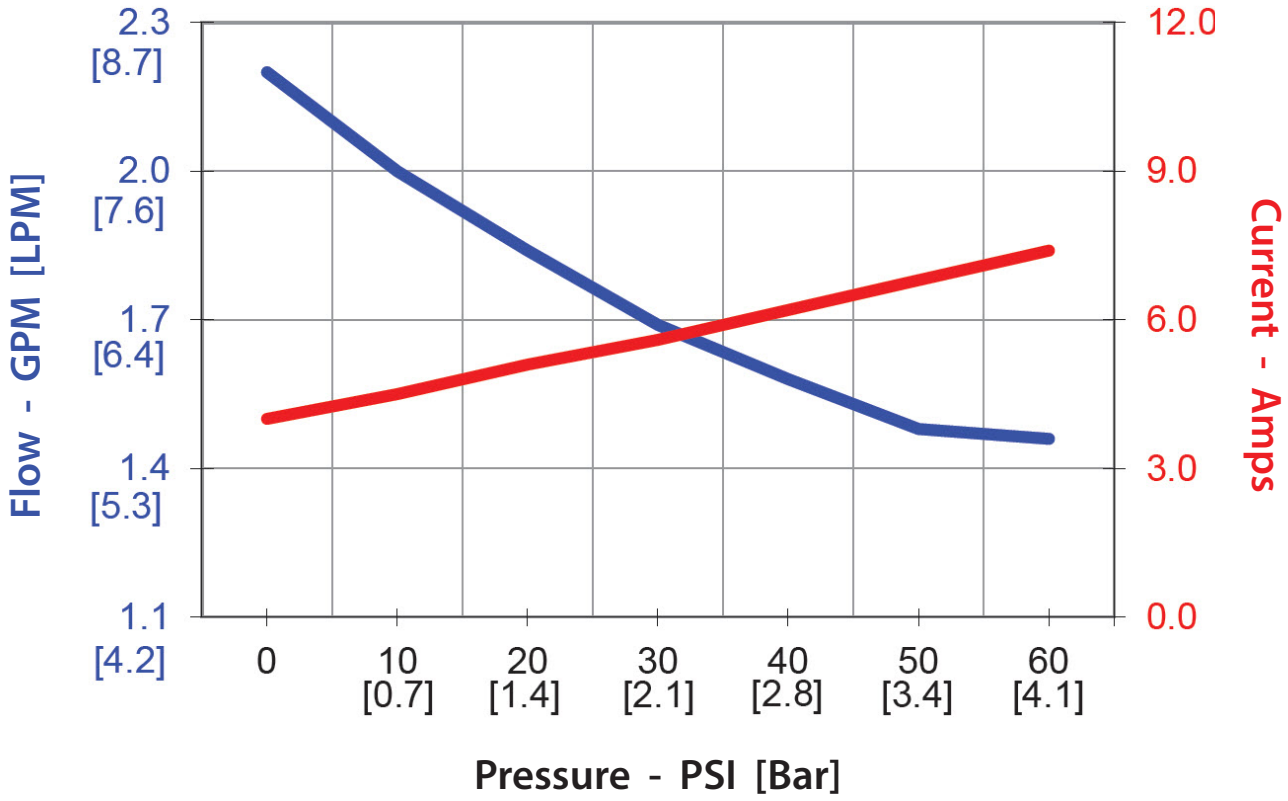

Annovi Reverberi spa
Via Martin L. King, 3
Tel +39 059 414 411
infoar@annovireverberi.it

Agriculture & Industry Division
41122 Modena (Italy)
Fax +39 059 253 505
www.annovireverberi.it

ANNOVI REVERBERI®
The Power of Experience