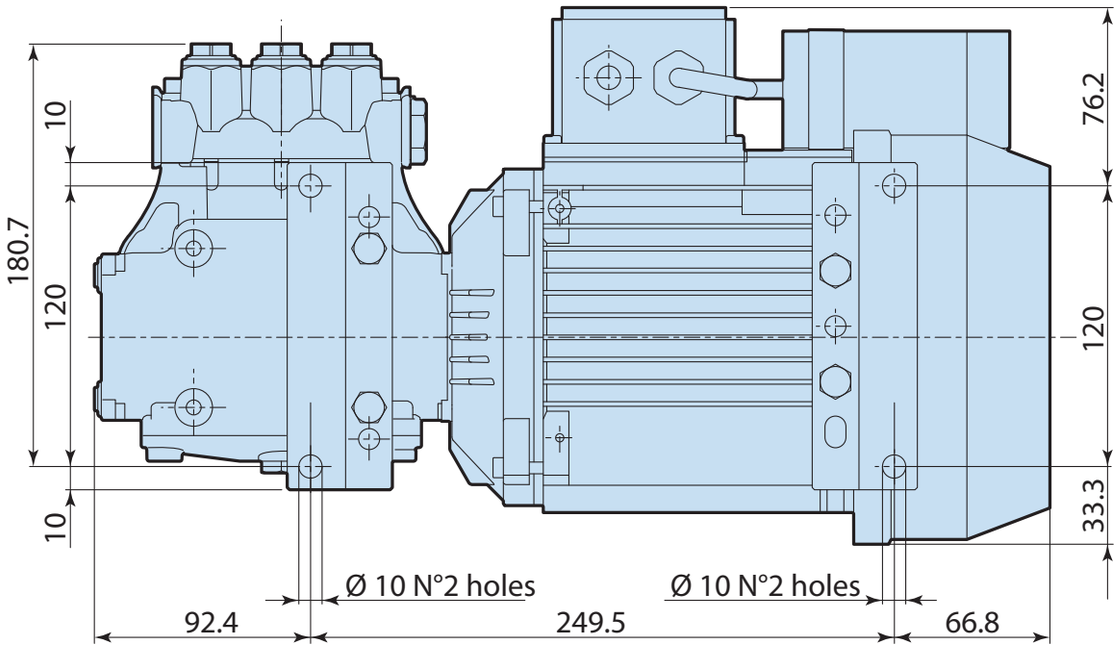
180.7
10
120
10
76.2
120
33.3
Ø 10 N°2 holes
Ø 10 N°2 holes
92.4
249.5
66.8

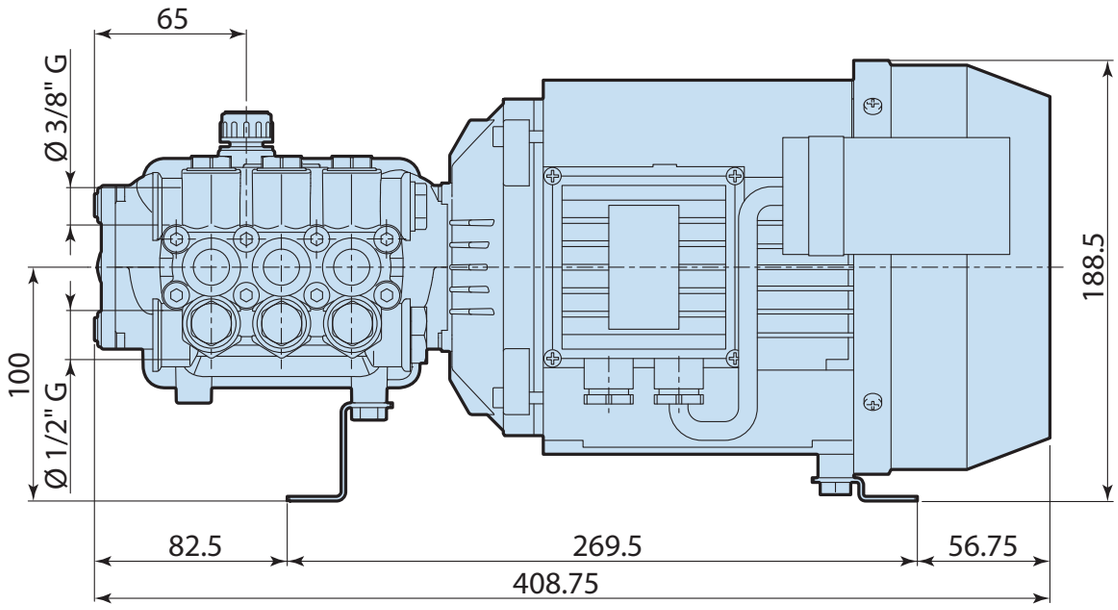
65
Ø 3/8" G
100
Ø 1/2" G
188.5
82.5
269.5
56.75
408.75

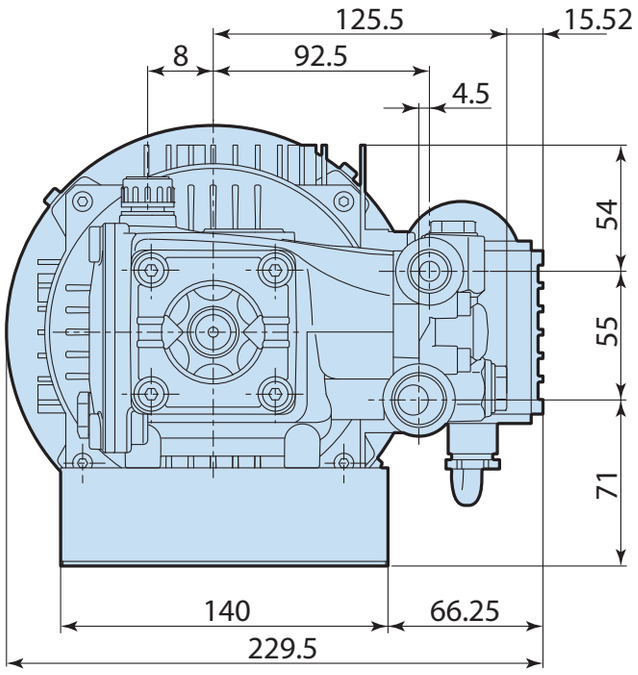
125.5
15.52
8
92.5
4.5
54
55
71
140
66.25
229.5