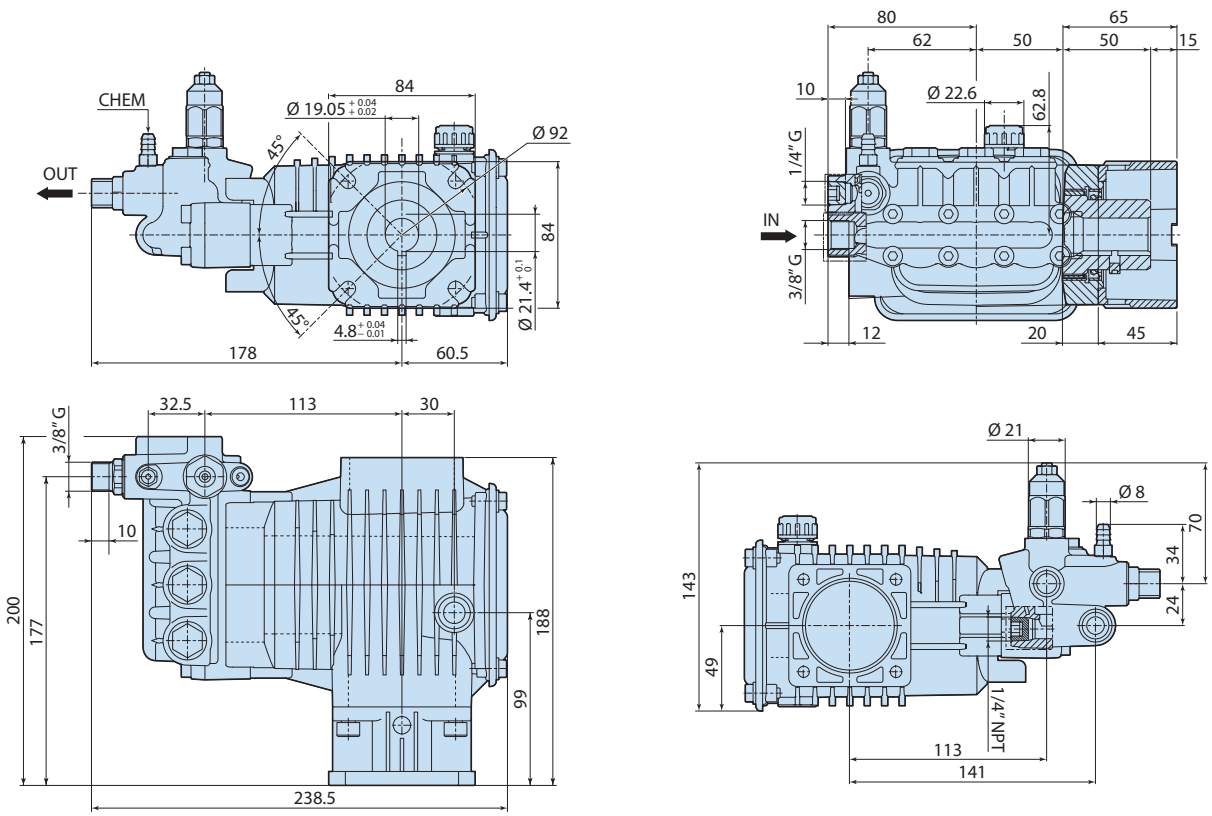
CHEM
OUT
84
Ø 19.05 +0.04 +0.02
45°
Ø 92
84
Ø 21.4 +0.1 0
45°
4.8 +0.04 −0.01
178
60.5
80
65
62
50
50
15
10
Ø 22.6
62.8
1/4" G
IN
3/8" G
12
20
45
32.5
113
30
3/8" G
10
200
177
188
99
238.5
Ø 21
Ø 8
70
34
24
143
49
1/4" NPT
113
141

2768501