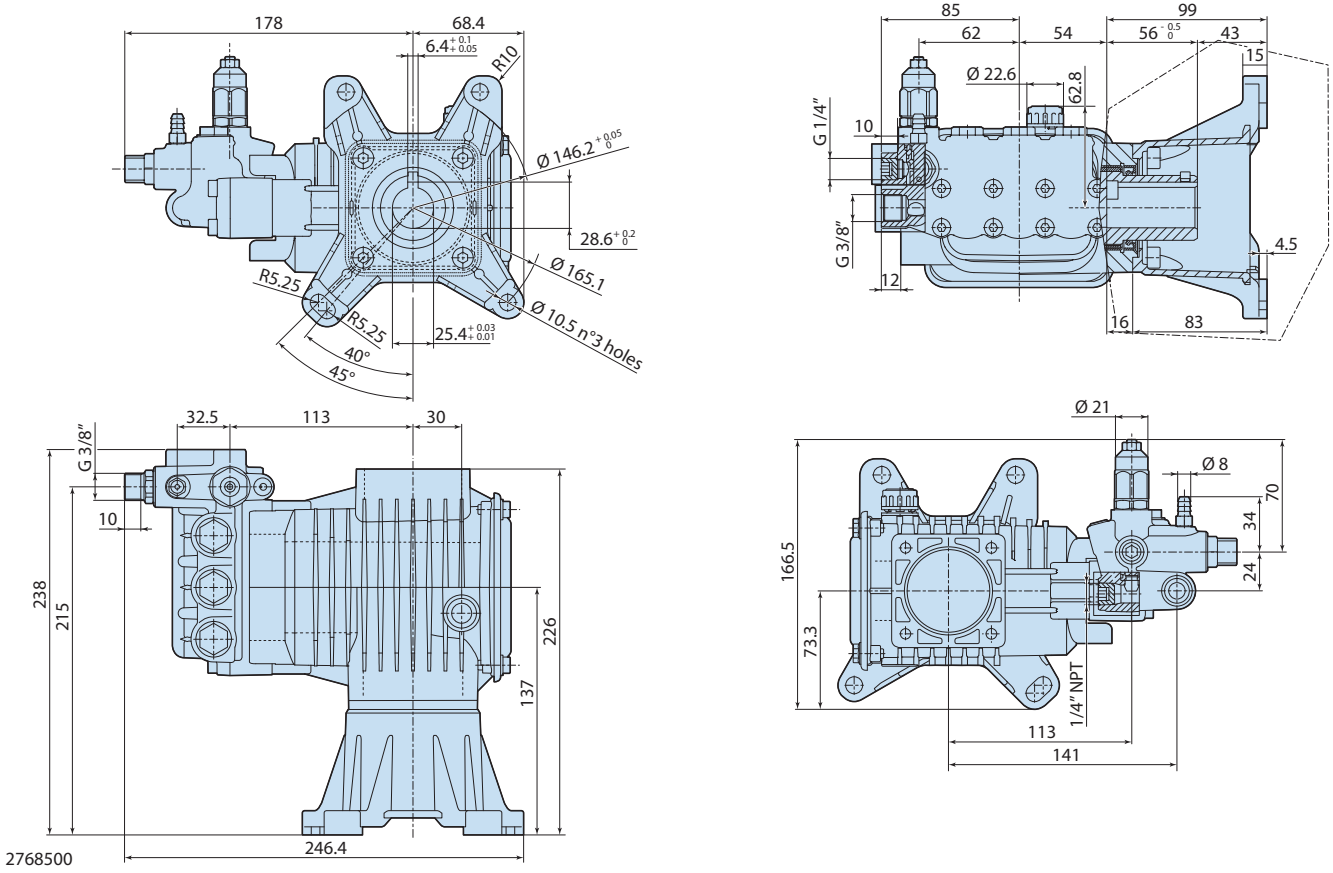
178
68.4
6.4 +0.1 +0.05
R10
Ø 146.2 +0.05 0
28.6 +0.2 0
Ø 165.1
Ø 10.5 n°3 holes
R5.25
R5.25
25.4 +0.03 +0.01
40°
45°
85
99
62
54
56 -0.5 0
43
15
Ø 22.6
62.8
G 1/4"
10
G 3/8"
4.5
12
16
83
32.5
113
30
G 3/8"
10
238
215
226
137
246.4
Ø 21
Ø 8
70
34
24
166.5
73.3
1/4" NPT
113
141

2768500