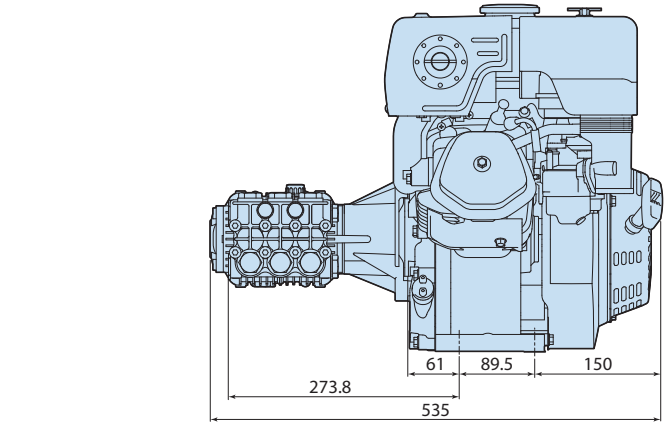
61
89.5
150
273.8
535

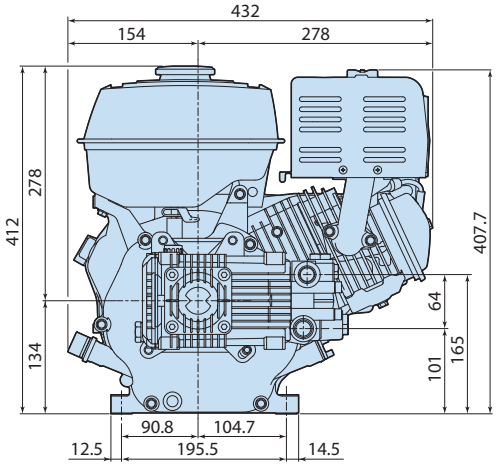
432
154
278
412
278
407.7
64
134
101
165
90.8
104.7
12.5
195.5
14.5

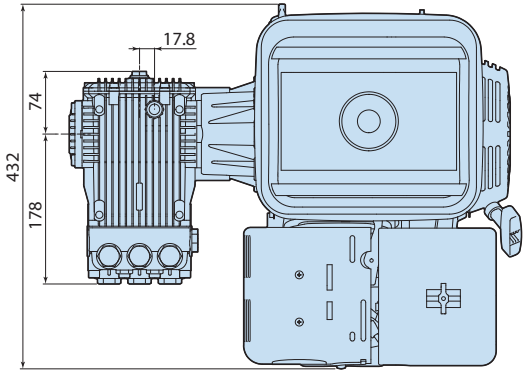
17.8
74
432
178

2288527