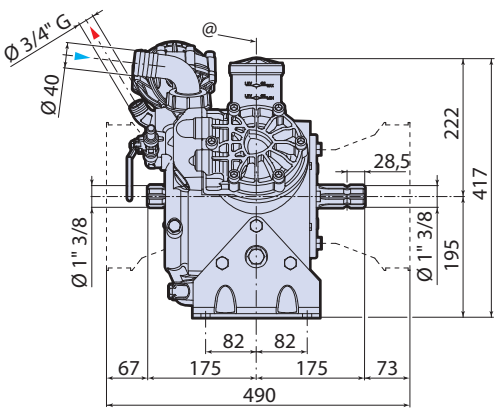

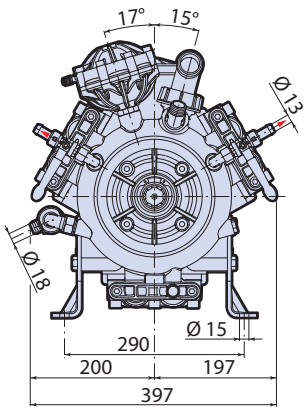

@ = Pump axis - Asse pompa

AP C/C

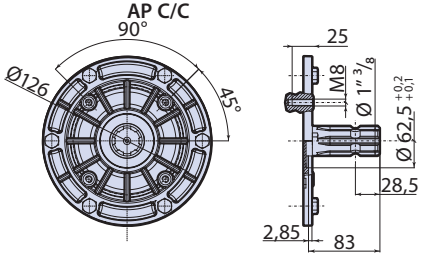

AP C/F (Ø1"3/8)

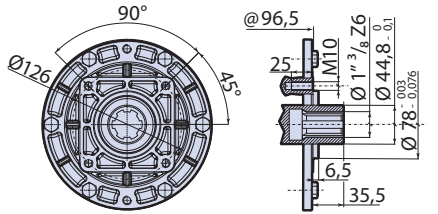

AP C/F (Ø32)

