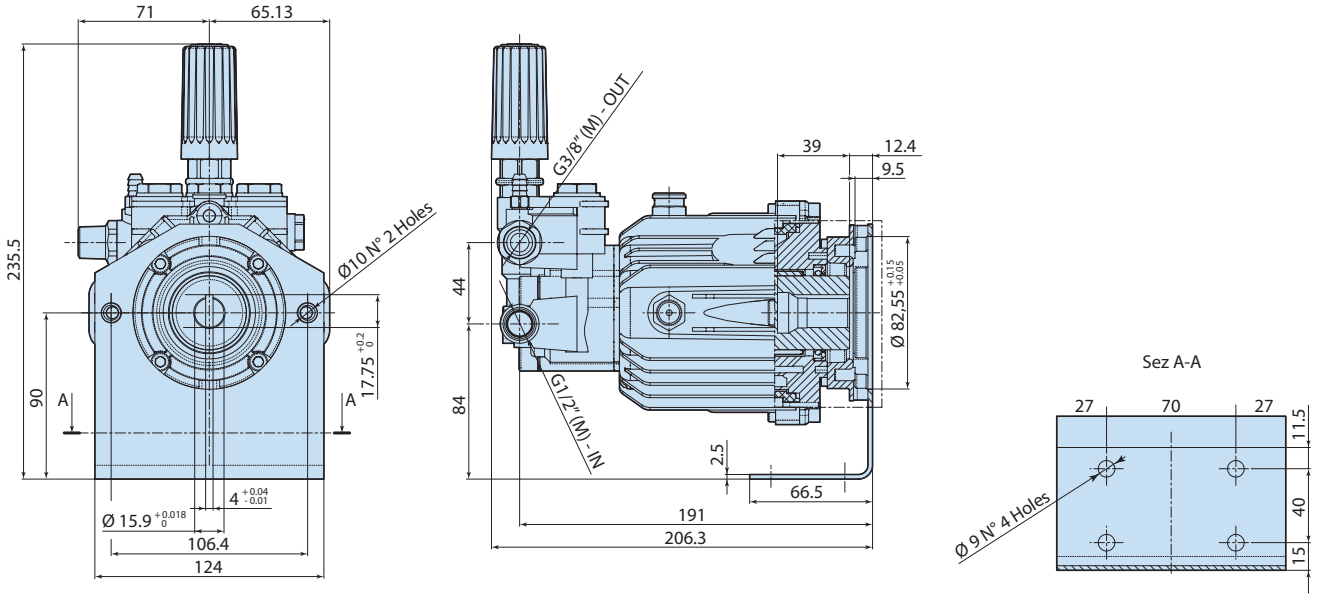
71
65.13
235.5
90
A
A
Ø10 N° 2 Holes
17.75 +0.2 0
Ø 15.9 +0.018 0
4 +0.04 -0.01
106.4
124
G3/8" (M) - OUT
G1/2" (M) - IN
39
12.4
9.5
44
84
Ø 82.55 +0.15 +0.05
2.5
66.5
191
206.3
Sez A-A
27
70
27
11.5
40
15
Ø 9 N° 4 Holes

1988521