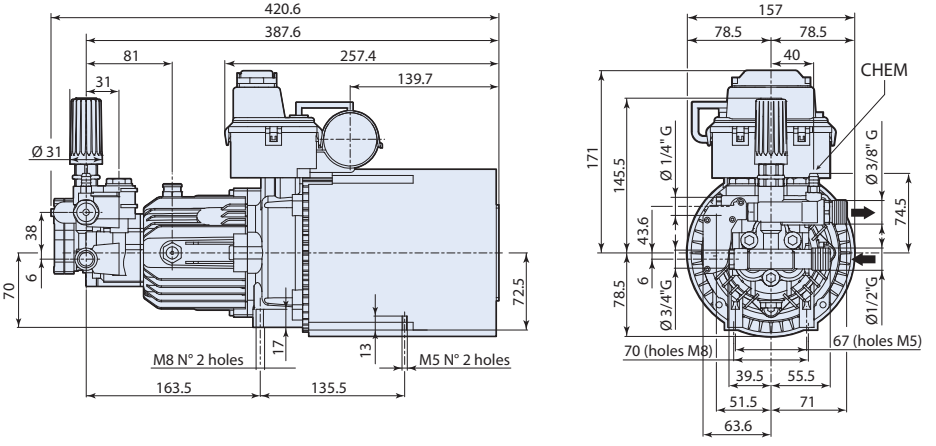
420.6
387.6
81
257.4
139.7
31
Ø 31
38
6
70
72.5
M8 N° 2 holes
17
13
M5 N° 2 holes
163.5
135.5
157
78.5
78.5
40
CHEM
171
145.5
Ø 1/4" G
Ø 3/8" G
43.6
74.5
6
78.5
Ø 3/4"G
Ø1/2"G
70 (holes M8)
67 (holes M5)
39.5
55.5
51.5
71
63.6