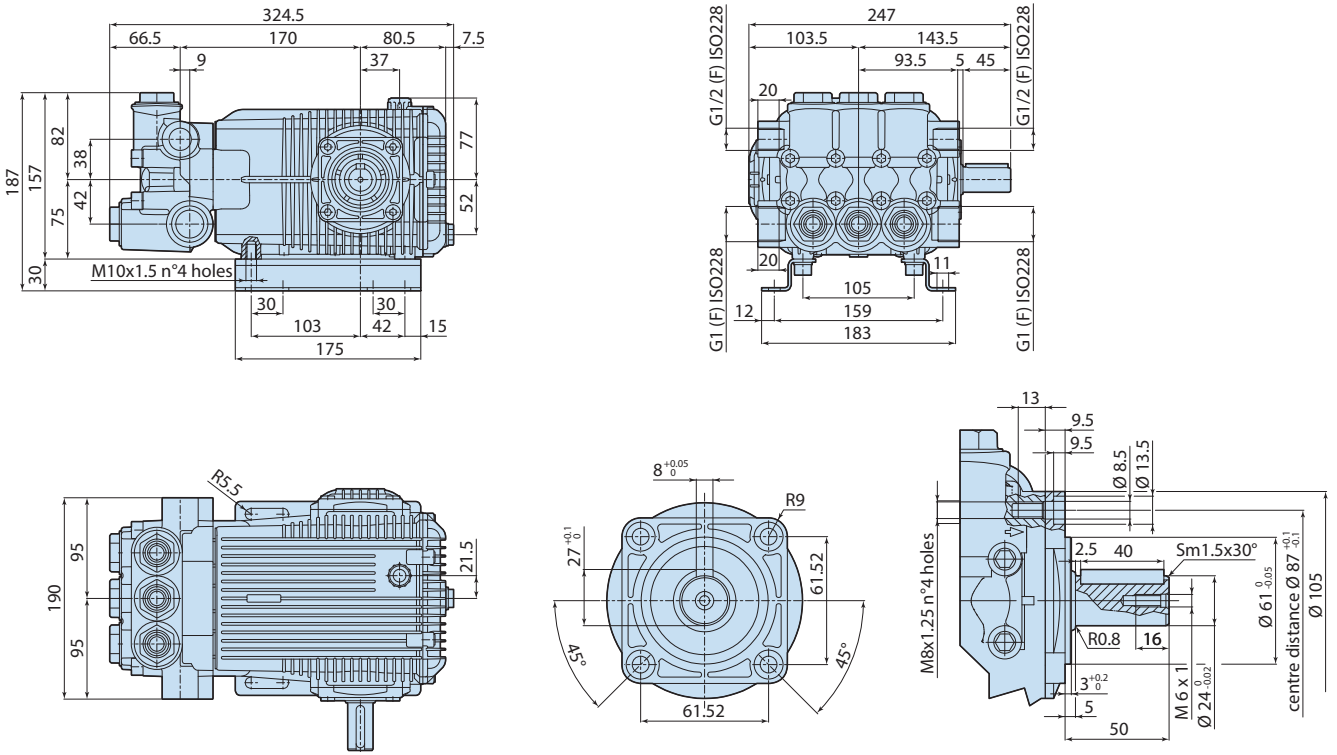
324.5
66.5
170
80.5
7.5
9
37
187
157
82
38
75
42
30
77
52
M10x1.5 n°4 holes
30
30
103
42
15
175
247
103.5
143.5
93.5
5
45
20
G1/2 (F) ISO228
G1/2 (F) ISO228
20
11
105
12
159
183
G1 (F) ISO228
G1 (F) ISO228
R5.5
190
95
95
21.5
8 +0.05 0
R9
27 +0.1 0
61.52
45°
45°
61.52
13
9.5
9.5
Ø 8.5
Ø 13.5
2.5
40
Sm1.5x30°
M8x1.25 n°4 holes
R0.8
16
3 +0.2 0
5
50
M 6 x 1
Ø 24 0 -0.02
Ø 61 0 -0.05
centre distance Ø 87 +0.1 -0.1
Ø 105

1948558