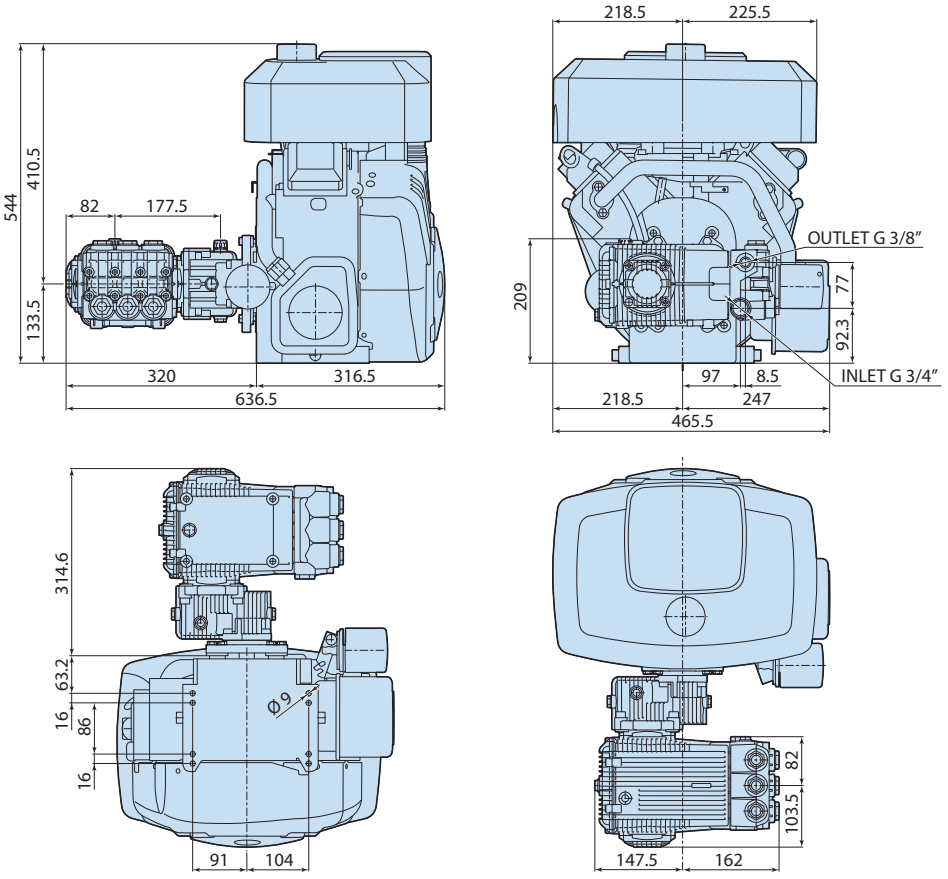
544
410.5
133.5
82
177.5
320
316.5
636.5
218.5
225.5
209
OUTLET G 3/8"
77
92.3
INLET G 3/4"
97
8.5
218.5
247
465.5
314.6
63.2
16
86
16
Φ9
91
104
82
103.5
147.5
162

1948541